PART NO.		REV	ECO	DATE	APP
		E	94450	05-14-07	TLM

MATERIALS & SPECIFICATIONS

HOUSING: ALUMINUM 6061-T6, NICKEL PLATE PER AMS-C-26074

INSULATOR: LIQUID CRYSTAL POLYMER (LCP) PER ASTM D5138

CONTACT: BERYLLIUM COPPER PER ASTM B194, C17200. GOLD PLATED PER ASTM B488, (HARD GOLD) TYPE II CODE C, CLASS 1.27

TERMINATION: COATED WITH SN63A PER J-STD-006

CURRENT RATING 1 AMP MAX PER MIL-DTL-32139

CONTACT RESISTANCE 25 MILLIOHM MAX

PERFORMANCE: PRODUCT FAMILY TESTED TO AND PASSED THE PERFORMANCE SPECIFICATIONS OF TABLE VIII OF MIL-DTL-32139

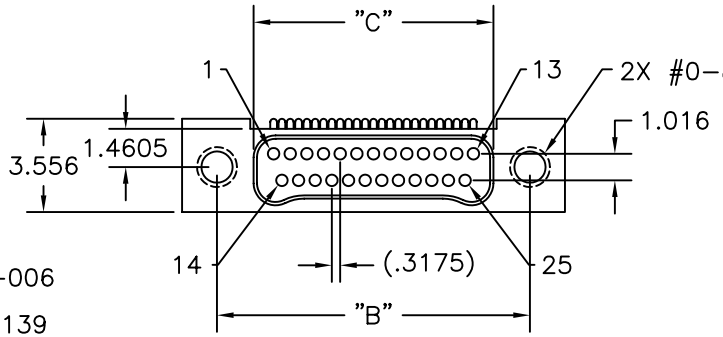

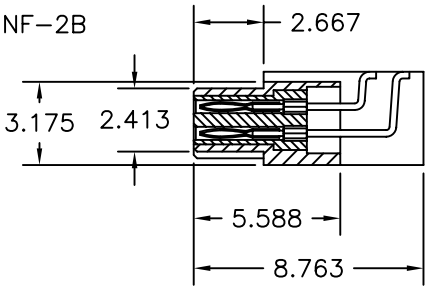

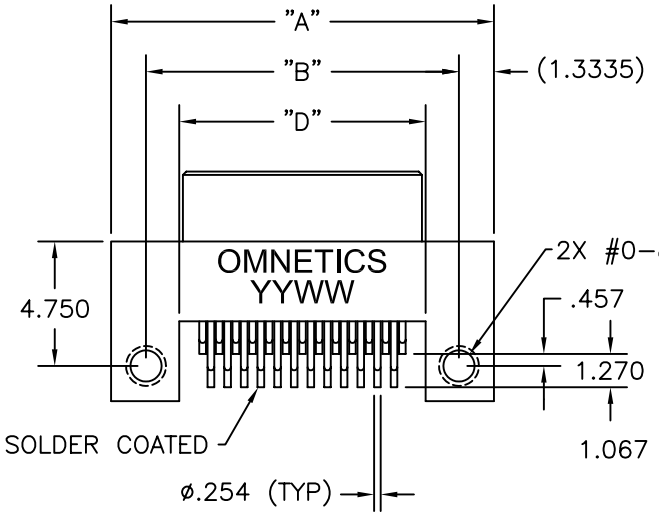

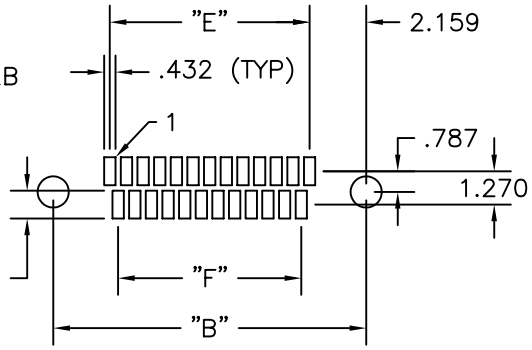

SUGGESTED PAD LAYOUT

METRIC

PART NO.	CONTACTS	"A"	"B"	"C"	"D"	"E"	"F"
A28100-009	9	9.525	6.858	4.064	4.318	2.540	1.905
A28100-015	15	11.430	8.763	5.969	6.223	4.445	3.810
A28100-021	21	13.335	10.668	7.874	8.128	6.350	5.715
A28100-025	25	14.605	11.938	9.144	9.398	7.620	6.985
A28100-031	31	16.510	13.843	11.049	11.303	9.525	8.890
A28100-037	37	18.415	15.748	12.954	13.208	11.430	10.795
A28100-051	51	22.860	20.193	17.399	17.653	15.875	15.240
A28100-065	65	27.305	24.638	21.844	22.098	20.320	19.685

(SHOWN)

MNPO

-TOLERANCES-
UNLESS OTHERWISE NOTED
DIMENSIONS IN MILLIMETERS
2 PL DEC ± .25
3 PL DEC ± .127
4 PL DEC ±
ANGLES ±

OMNETICS CONNECTOR CORPORATION

DFTM. PER	DATE 01-23-04	TITLE: (XX) PIN MALE BI-LOBE CONNECTOR
CHK'D.	DATE	
APP'D.	DATE	

CAGE CODE 61873
DWG NO. A28100-0XX
SHEET 1 OF 1
SCALE: 5:1
REV E