PIN RECEPTACLES
for .015” - .025” diameter pins

4011

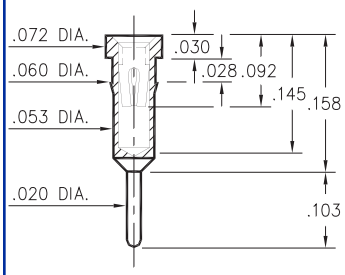

4011-0-15-XX-30-XX-04-0
Press-fit in .057 mounting hole

1801

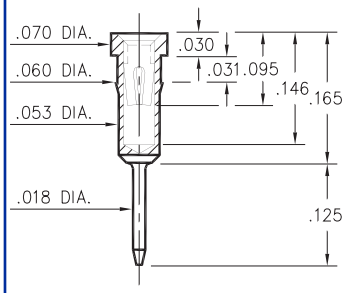

1801-0-15-XX-30-XX-04-0
Press-fit in .057 mounting hole
Shell is Ph. Br. Alloy 544 (B2)

1001

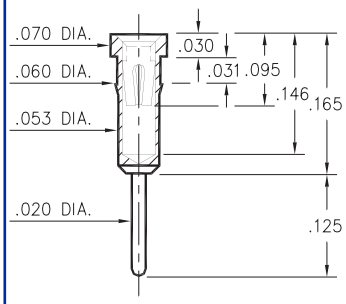

1001-0-15-XX-3X-XX-04-0
Press-fit in .057 mounting hole

0156

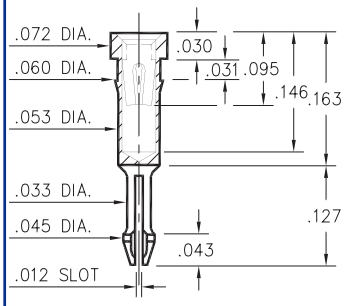

0156-0-18-XX-30-XX-04-0
Self-retention socket pin .038-.043 hole prior to soldering

0255

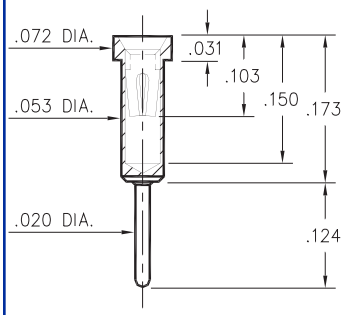

0255-0-15-XX-30-XX-04-0
Solder mount in .022 min. mounting hole

1109

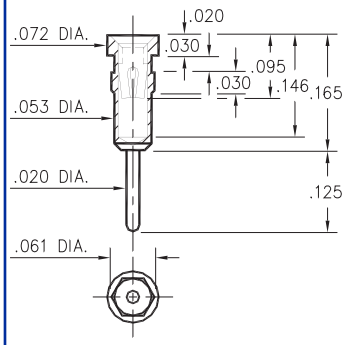

1109-0-15-XX-30-XX-04-0
Hex press-fit in .057 plated thru hole

3013

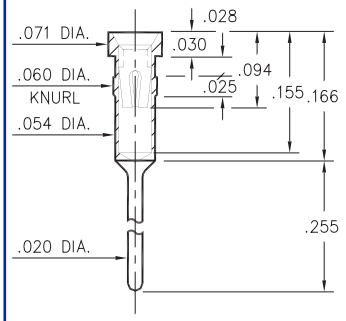

3013-0-15-XX-32-XX-04-0
Press-fit in .057 mounting hole

0134

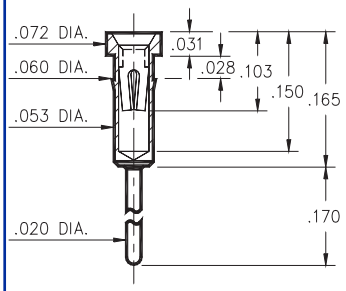

0134-0-15-XX-3X-XX-04-0
Press-fit in .057 mounting hole

0132/0135

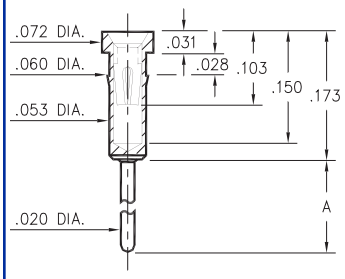

Basic Part Number	Length A
0132-0	.273
0135-0	.183

013X-0-15-XX-30-XX-04-0
Press-fit in .057 mounting hole

0133/0147

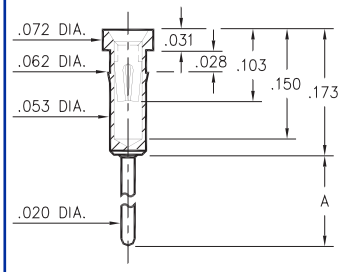

Basic Part Number	Length A
0133-0	.382
0147-0	.563

01XX-0-15-XX-30-XX-04-0
Press-fit in .059 mounting hole

SPECIFICATIONS

SHELL MATERIAL:
Brass Alloy 360, 1/2 Hard

CONTACT MATERIAL:
Beryllium Copper Alloy 172, HT

DIMENSION IN INCHES
TOLERANCES ON:
LENGTHS: ±.005
DIAMETERS: ±.002
ANGLES: ± 2°

ORDER CODE: XXXX - X - 1X - XX - 3X - XX - 04 - 0

BASIC PART #

SPECIFY SHELL FINISH:
01 200μ" TIN/LEAD OVER NICKEL
15 10μ" GOLD OVER NICKEL

SPECIFY CONTACT FINISH:
02 200μ" TIN/LEAD OVER NICKEL
14 10μ" GOLD OVER NICKEL
27 30μ" GOLD OVER NICKEL

SELECT CONTACT
#30 or #32 CONTACT (DATA ON PAGE 208)