SPECIFICATIONS

DDRIII SO DIMM Socket

AS Series
9.2mm Height SMT Type
0.60mm Pitch
200 Pos.

Mechanical
Contact Retention Force: *0.10kg min.*
Durability : *25 Cycles*

Electrical
Voltage Rating: *25V*
Current Rating: *0.5A*
Contact Resistance: *50mΩ max.*
Dielectric Withstanding Voltage: *250V AC/1 min.*
Insulation Resistance: *100MΩ*

Physical
Housing: *Thermoplastic, UL 94V-0 rated in Ivory Color*
Contact: *Copper alloy*
Plating: *See "ORDERING INFORMATION"*
Metal Spring: *Copper alloy*
Operating Temperature: *-55℃ to +85℃*

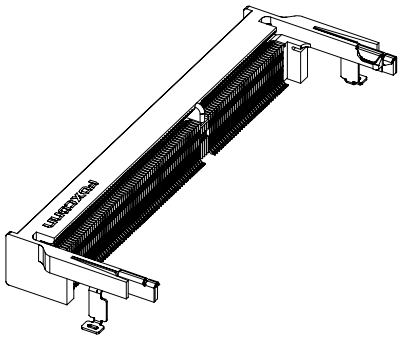

DRAWING

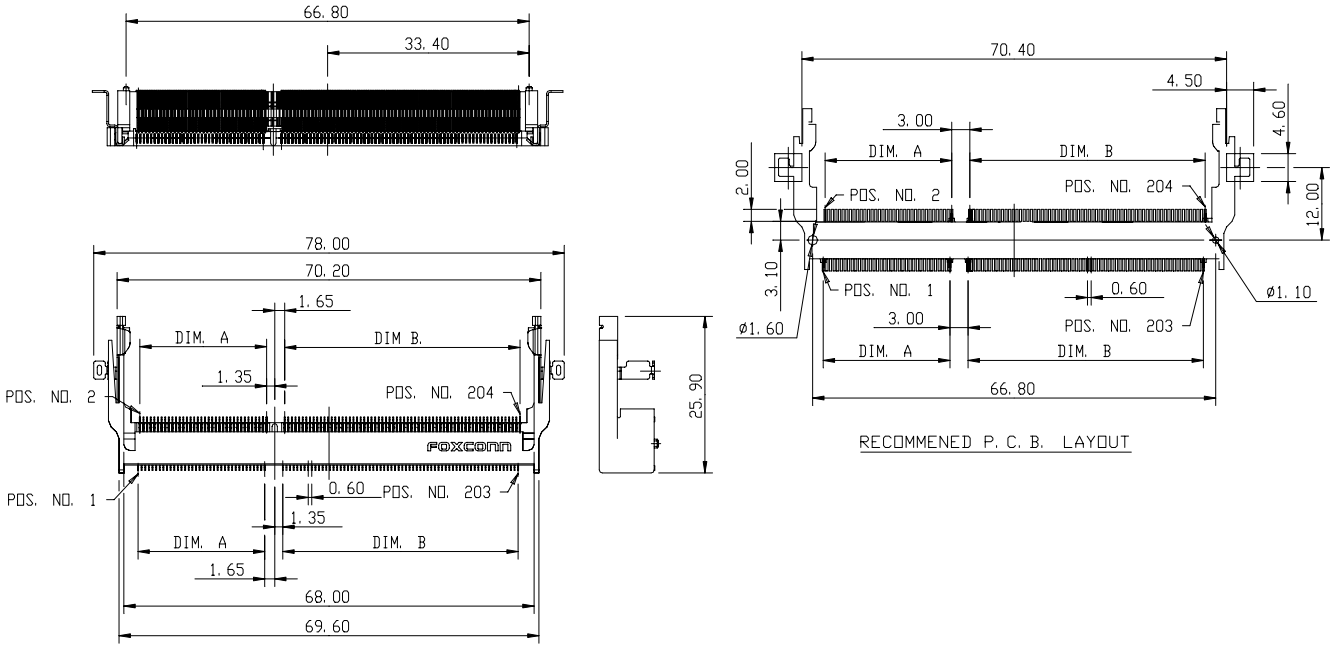

ORDERING INFORMATION

PRODUCT NO.: A S 0 A6 2 * - U A * N - * F

- Memory Module Socket
- Horizontal Type
- Single Row
- No. of Pos. — A6=204 Pos.
- SMT TYPE
- Contact Area Plating — 6=10u" Gold, 1=Gold Flash
- U=DDRIII SO DIMM
- A=9.2mm Height
- S=Standard Type, R=Reverse Type
- N =GENERAL TYPE
- 4=SOFT TRAY, 7=TAPE REEL
- F=LEAD FREE

P/N	DIM. A	DIM. B
AS0A62*-UASN-*F	21.00	39.00
AS0A62*-UARN-*F	39.00	21.00

All specification & dimensions are subject to change, please call your nearest Foxconn sales representative for update information.