I/O Connector

8P Round Connector

CMC 90□□-0□□□

No. of Pins — 4P-4, 8P-2

Silver plating: 02
Gold plating: 03

■ Material and Plating

- Housing :
  Polybutylene Terephthalate (Black) 94V-0
- Cover : Vinyl Chloride (Black)
- Plug pin : Phosphor Bronze
  Silver or Gold plating
- Contact : Phosphor Bronze
  Tin-lead (Reflow Treatment) or Silver plating
- Ground Contact : Brass Nickel plating

● Straight Type Plug

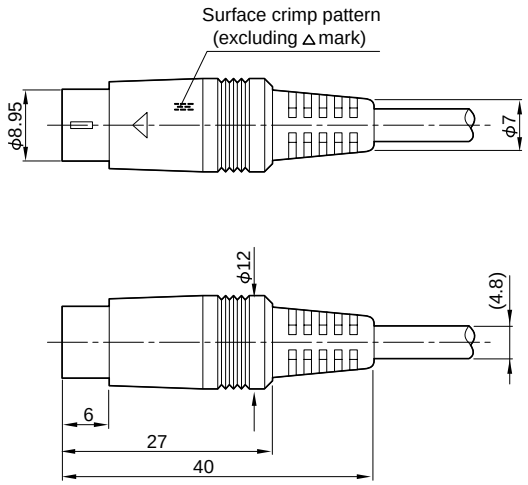

■Note

This connector is an insertion type molded product sold with the connector and wire together. When contacting us to order, specify the wire length, cabling and terminal treatment required.

■特　記

インサート成形品ですので、ケーブル付の製品として販売しております。別途、ケーブルのL寸法、配線、色調、端末処理等を御指定の上、お問い合わせ下さい。

■ Pin Arrangement for the Connecting Sections
接続部の配列

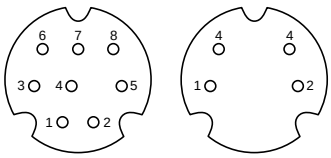

CMC 90□□-0□□□

No. of Pins — 4P-4, 8P-2

Silver plating: 02
Gold plating: 03

■ Material and Plating

- Housing :
  Polybutylene Terephthalate (Black) 94V-0
- Cover : Vinyl Chloride (Black)
- Plug pin : Phosphor Bronze
  Silver or Gold plating
- Contact : Phosphor Bronze
  Tin-lead (Reflow Treatment) or Silver plating
- Ground Contact : Brass Nickel plating

● Right -Angle Type Plug

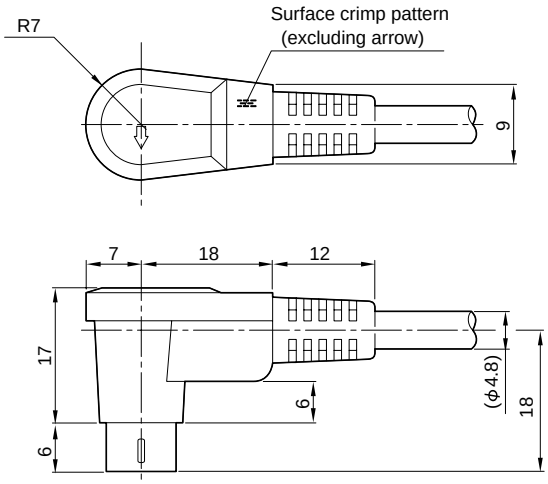

■Note

This connector is an insertion type molded product sold with the connector and wire together. When contacting us to order, specify the wire length, cabling and terminal treatment required.

■特　記

インサート成形品ですので、ケーブル付の製品として販売しております。別途、ケーブルのL寸法、配線、色調、端末処理等を御指定の上、お問い合わせ下さい。
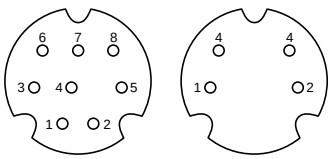
■ Pin Arrangement for the Connecting Sections
接続部の配列