DATE	SYM	REVISION RECORD	AUTH.	DR.	CK.
7/20/00	–	ISSUED		NT	DG

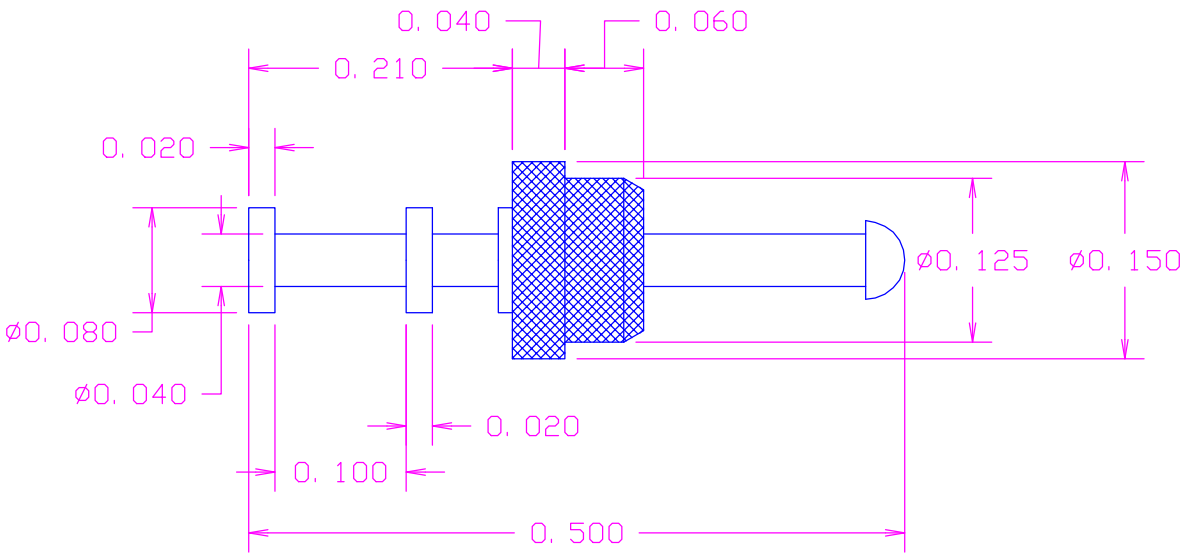

RECOMMENDED HOLE SIZE
FOR PRESS FIT INSERTION

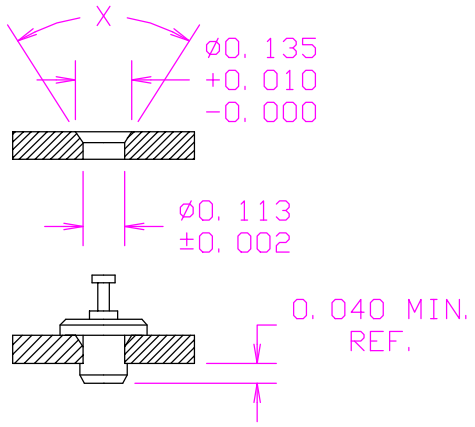

FOR BOARD THICKNESS GREATER THAN . 040, X=60°
FOR BOARD THICKNESS LESS THAN . 040, X=80°

MATERIAL: PIN– BRASS PER ASTM B16,
ALLOY C 36000, 1/2 HARD
BUSHING– PTFE PER ASTM D1710
COLOR(XX)–SEE COLOR CODE
FINISH: PIN– .0003"MIN. ELECTRO–SOLDER
PER MIL–P–81728, OVER .0001"MIN. COPPER

(XX)COLOR CODE:
10-BLACK
11-BROWN
12-RED
13-ORANGE
14-YELLOW
15-GREEN
16-BLUE
17-VIOLET
18-GRAY
19-WHITE(NATURAL)

ACTUAL SIZE

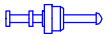

TOLERANCES (EXCEPT AS NOTED)	CONCORD		ELECTRONICS CORPORATION
DECIMAL ± .005	P/N	SCALE	30 GREAT JONES ST. NEW YORK N. Y. 10012
FRACTIONAL ± 1/64	TITLE TERMINAL. PTFE INSULATED		
ANGULAR ± 5°	DATE 7/20/00	DRAWING NUMBER 1111–04–05XX	