THIS DRAWING IS UNPUBLISHED. RELEASED FOR PUBLICATION -,- .
© COPYRIGHT - BY TYCO ELECTRONICS CORPORATION. ALL RIGHTS RESERVED.

LOC	DIST
FT	0

REVISIONS

P	LTR	DESCRIPTION	DATE	DWN	APVD
	B	REVISED PER ECO-06-16025	7/7/06	SS	DC

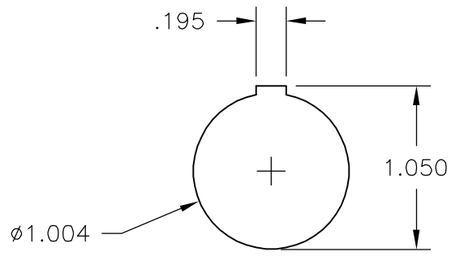

BACKEND DIMS.
OF RECEPTACLE

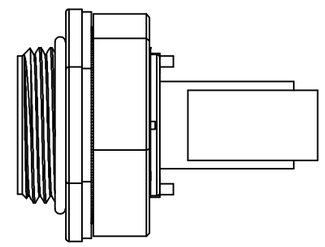

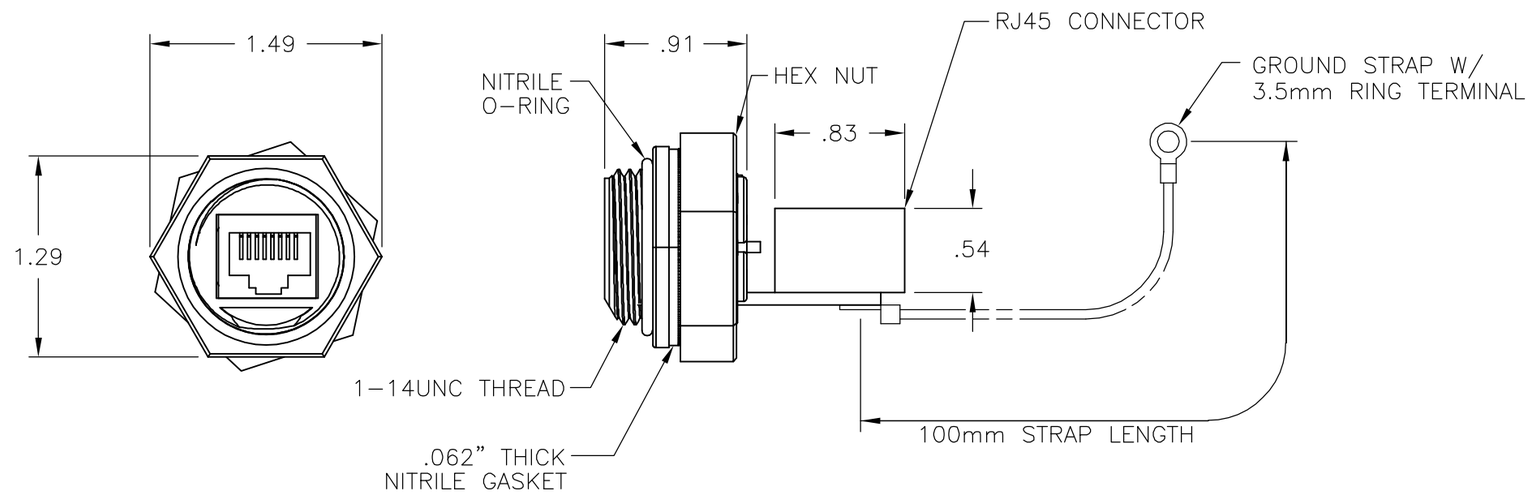

	YES	1546413-4
	NO	1546413-3
SUPERSEDED	YES	1546413-2
SUPERSEDED	NO	1546413-1
	GROUND STRAP	PART NO.

THIS DRAWING IS A CONTROLLED DOCUMENT.

DIMENSIONS: INCHES

TOLERANCES UNLESS OTHERWISE SPECIFIED:

0 PLC	± -
1 PLC	± -
2 PLC	± .02
3 PLC	± .005
4 PLC	± -
ANGLES	± 2°

MATERIAL: -

FINISH: -

DWN S SCHLEGEL 09OCT2002
CHK H WAKEEM 10/9/02
APVD H WAKEEM 10/9/02
PRODUCT SPEC —
APPLICATION SPEC —
WEIGHT —

tyco Electronics
Tyco Electronics Corporation
Harrisburg, Pa 17105-3608

NAME
RJ-45 BULKHEAD PASS THROUGH
WITH BACKSIDE JACK
—

SIZE	CAGE CODE	DRAWING NO	RESTRICTED TO
A3	00779	C-1546413	—

CUSTOMER DRAWING

SCALE	SHEET	REV
NTS	1 OF 1	B