DUAL-IN-LINE TURRET HEADERS
Solder Tail and Wrapost
Open Frame

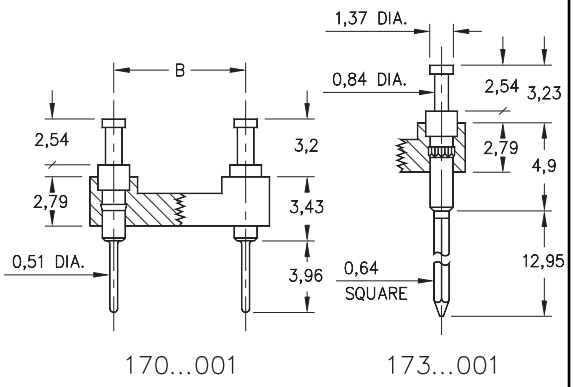

- Series 170 &173 DIL headers are equipped with turret heads for wiring applications.
- Series 170 terminations are pluggable 0,51 dia. solder tails MM #0700, See page 183 for details. Series 173 terminations are three level wraposts MM #0730. See page 195 for details.
- Insulators are high temperature thermoplastic.

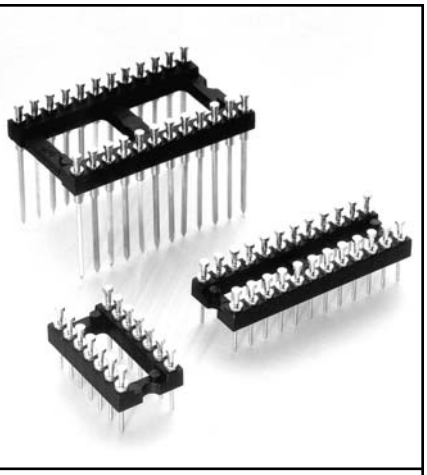

Ordering Information

Total number of pins	A	B	C	Quantity per tube	Solder Tail	3 Level Wrapost
10	12,6	5,08	7,6	41	170-XX-210-00-001000	173-10-210-00-001000
4	5,0	7,62	10,1	102	170-XX-304-00-001000	173-10-304-00-001000
6	7,6	7,62	10,1	67	170-XX-306-00-001000	173-10-306-00-001000
8	10,1	7,62	10,1	50	170-XX-308-00-001000	173-10-308-00-001000
10	12,6	7,62	10,1	40	170-XX-310-00-001000	173-10-310-00-001000
14	17,7	7,62	10,1	28	170-XX-314-00-001000	173-10-314-00-001000
16	20,3	7,62	10,1	25	170-XX-316-00-001000	173-10-316-00-001000
18	22,8	7,62	10,1	22	170-XX-318-00-001000	173-10-318-00-001000
20	25,3	7,62	10,1	20	170-XX-320-00-001000	173-10-320-00-001000
22	27,8	7,62	10,1	18	170-XX-322-00-001000	173-10-322-00-001000
24	30,4	7,62	10,1	16	170-XX-324-00-001000	173-10-324-00-001000
28	35,5	7,62	10,1	14	170-XX-328-00-001000	173-10-328-00-001000
20	25,4	10,16	12,7	20	170-XX-420-00-001000	173-10-420-00-001000
22	27,8	10,16	12,7	18	170-XX-422-00-001000	173-10-422-00-001000
24	30,4	10,16	12,7	16	170-XX-424-00-001000	173-10-424-00-001000
28	35,5	10,16	12,7	14	170-XX-428-00-001000	173-10-428-00-001000
32	40,6	10,16	12,7	12	170-XX-432-00-001000	173-10-432-00-001000
24	30,4	15,24	17,7	16	170-XX-624-00-001000	173-10-624-00-001000
28	35,5	15,24	17,7	14	170-XX-628-00-001000	173-10-628-00-001000
32	40,6	15,24	17,7	12	170-XX-632-00-001000	173-10-632-00-001000
36	45,7	15,24	17,7	11	170-XX-636-00-001000	173-10-636-00-001000
40	50,8	15,24	17,7	10	170-XX-640-00-001000	173-10-640-00-001000
42	53,3	15,24	17,7	9	170-XX-642-00-001000	173-10-642-00-001000
48	60,9	15,24	17,7	8	170-XX-648-00-001000	173-10-648-00-001000
50	63,5	15,24	17,7	8	170-XX-650-00-001000	173-10-650-00-001000
52	66,0	15,24	17,7	7	170-XX-652-00-001000	173-10-652-00-001000
50	63,5	22,86	25,3	8	170-XX-950-00-001000	173-10-950-00-001000
52	66,0	22,86	25,3	7	170-XX-952-00-001000	173-10-952-00-001000
64	81,2	22,86	25,3	6	170-XX-964-00-001000	173-10-964-00-001000

SPECIFY PLATING CODE XX=	10◇	90	40◇
Pin Plating	0,25µm Au	5,08µm Sn/Pb	5,08µm Sn

RoHS 2002/95/EC

For RoHS compliance select ◇ plating code.

For Electrical, Mechanical & Enviromental Data, See pg. 4

XX=Plating Code See Below