HIGH POWER FLANGE MOUNT BERYLLIUM OXIDE ATTENUATORS

10 Watts Part No. 33-1005
Attenuator, Flange Mount

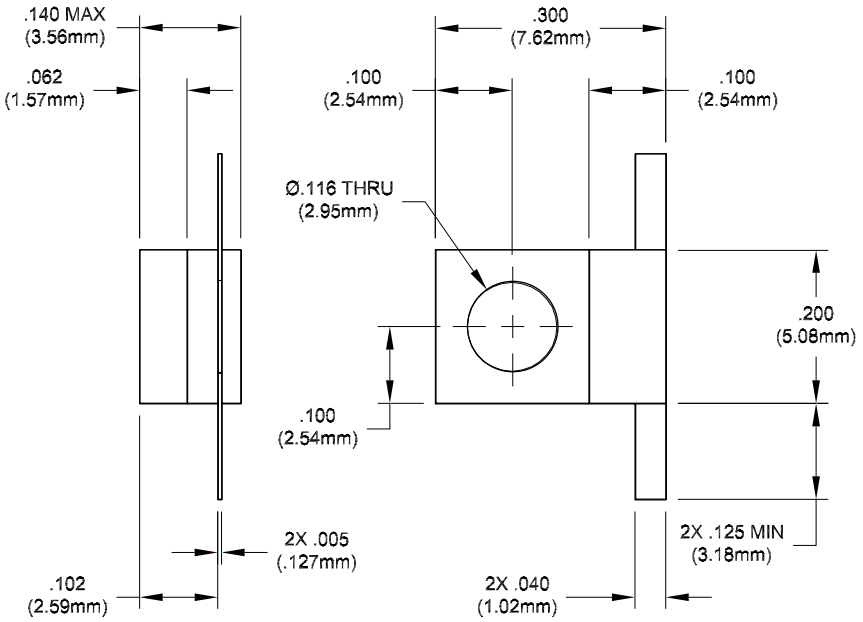

PERFORMANCE SPECIFICATIONS

10 Watts

Part No. 33-1005

Frequency: DC to 4.0 GHz

VSWR (Max): 1.15:1 DC - 2.0
1.35:1 2.0 - 4.0

Attenuation: 1-10 dB ± 0.5 dB
11-20 dB ± 1.0 dB

10 Watts Part No. 33-1017
Attenuator, Flange Mount

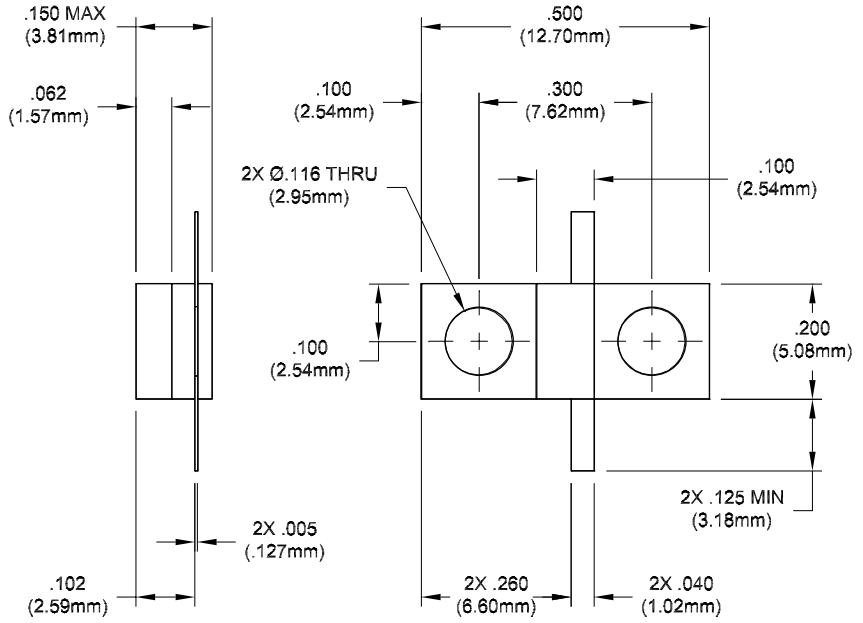

PERFORMANCE SPECIFICATIONS

10 Watts

Part No. 33-1017

Frequency: DC to 4.0 GHz

VSWR (Max): 1.15:1 DC - 2.0
1.35:1 2.0 - 4.0

Attenuation: 1-10 dB ± 0.5 dB
11-20 dB ± 1.0 dB

Tel: *800-544-5594*
Fax: *561-283-5286*

email: *rflabs@rflabs.com*
Website: *http://www.rflabs.com*