THIS DRAWING IS UNPUBLISHED. RELEASED FOR PUBLICATION -,- .
© COPYRIGHT - BY TYCO ELECTRONICS CORPORATION. ALL RIGHTS RESERVED.

LOC	DIST
CM	00

REVISIONS

P	LTR	DESCRIPTION	DATE	DWN	APVD
	J	REVISION PER EC 0G3B-0741-04	28-DEC-04	SH	DB

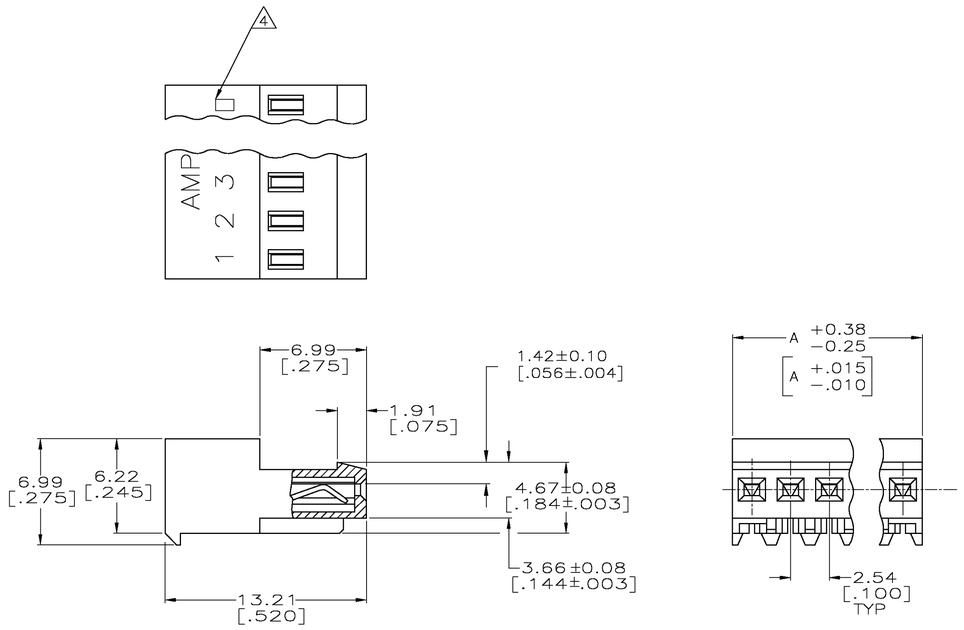

LEAD FREE			
	71.12 [2.800]	28	5-641240-8
	68.58 [2.700]	27	5-641240-7
	66.04 [2.600]	26	5-641240-6
	63.50 [2.500]	25	5-641240-5
	60.96 [2.400]	24	5-641240-4
	58.42 [2.300]	23	5-641240-3
	55.88 [2.200]	22	5-641240-2
	53.34 [2.100]	21	5-641240-1
	50.80 [2.000]	20	5-641240-0
	48.26 [1.900]	19	4-641240-9
	45.72 [1.800]	18	4-641240-8
	43.18 [1.700]	17	4-641240-7
	40.64 [1.600]	16	4-641240-6
	38.10 [1.500]	15	4-641240-5
	35.56 [1.400]	14	4-641240-4
	33.02 [1.300]	13	4-641240-3
	30.48 [1.200]	12	4-641240-2
	27.94 [1.100]	11	4-641240-1
	25.40 [1.000]	10	4-641240-0
	22.86 [.900]	9	3-641240-9
	20.32 [.800]	8	3-641240-8
	17.78 [.700]	7	3-641240-7
	15.24 [.600]	6	3-641240-6
	12.70 [.500]	5	3-641240-5
	10.16 [.400]	4	3-641240-4
	7.62 [.300]	3	3-641240-3
	5.08 [.200]	2	3-641240-2
	DIM A	NO.OF POSN	ASSEMBLY

CONTAINS LEAD			
	71.12 [2.800]	28	2-641240-8
	68.58 [2.700]	27	2-641240-7
	66.04 [2.600]	26	2-641240-6
	63.50 [2.500]	25	2-641240-5
	60.96 [2.400]	24	2-641240-4
	58.42 [2.300]	23	2-641240-3
	55.88 [2.200]	22	2-641240-2
	53.34 [2.100]	21	2-641240-1
	50.80 [2.000]	20	2-641240-0
	48.26 [1.900]	19	1-641240-9
	45.72 [1.800]	18	1-641240-8
	43.18 [1.700]	17	1-641240-7
	40.64 [1.600]	16	1-641240-6
	38.10 [1.500]	15	1-641240-5
	35.56 [1.400]	14	1-641240-4
	33.02 [1.300]	13	1-641240-3
	30.48 [1.200]	12	1-641240-2
	27.94 [1.100]	11	1-641240-1
	25.40 [1.000]	10	1-641240-0
	22.86 [.900]	9	641240-9
	20.32 [.800]	8	641240-8
	17.78 [.700]	7	641240-7
	15.24 [.600]	6	641240-6
	12.70 [.500]	5	641240-5
	10.16 [.400]	4	641240-4
	7.62 [.300]	3	641240-3
	5.08 [.200]	2	641240-2
	DIM A	NO.OF POSN	ASSEMBLY

1. MATERIAL: CONNECTOR-NYLON UL94V-2 (GREEN).
   CONTACTS-0.30 [.012] THICK COPPER ALLOY
   (0.00076 [.000030] GOLD)

2. CONTACTS ACCEPT 28 AWG WIRE WITH 1.52 [.060] MAX INSULATION DIAMETER.

3. CONTACTS MUST ACCEPT 0.64±0.03 [.025±.001] SQUARE POST AND REMAIN LOCKED IN POSITION.

4. IDENTIFICATION NUMBER FOR LAST CIRCUIT MAY NOT APPEAR ON ALL ASSEMBLIES.

5. DIMENSIONS IN BRACKETS ARE IN INCHES.

6. HOUSING FEATURES ARE: CLOSED END WITH LOCKING RAMP.

METRIC

THIS DRAWING IS A CONTROLLED DOCUMENT.

DIMENSIONS: mm [INCHES]

TOLERANCES UNLESS OTHERWISE SPECIFIED:
0 PLC ±
1 PLC ±
2 PLC ± 0.13 [.005]
3 PLC ±
4 PLC ±
ANGLES ±

MATERIAL 1

FINISH 1

DWN S. HOOVER 28-DEC-2004
CHK D. BOSSI 28-DEC-2004
APVD D. BOSSI 28-DEC-2004

PRODUCT SPEC 108-1050
APPLICATION SPEC 114-1019
WEIGHT

tyco Electronics — Tyco Electronics Corporation, Harrisburg, Pa 17105-3608

NAME: MTA .100 CONNECTOR ASSEMBLY 28 AWG, STANDARD

SIZE	CAGE CODE	DRAWING NO	RESTRICTED TO
A1	00779	C-641240	

CUSTOMER DRAWING — SCALE 5:1 — SHEET 1 OF 1 — REV J