D1RFRD006

REVISION RECORD				
REV	ECO	DESCRIPTION	DRFT	CHKD
1		ADD PART NO	LGY 10/14/02	
2		DRAWING MODIFY	Synge 9/08/03	
3		NOTES MODIFY	Among 10/22/04	

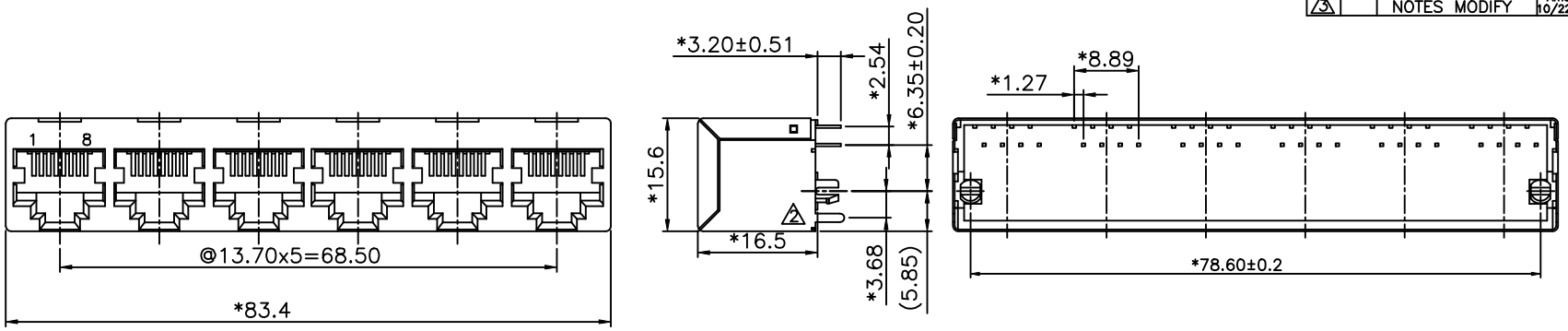

NOTES:

ELECTRICAL:

1. VOLTAGE RATING : 125 VAC RMS.
2. CURRENT RATING : 1.5 AMP.
3. CONTACT RESISTANCE : 30 MILLIOHMS MAX.
4. INSULATION RESISTANCE: 500 MEGOHMS MIN @ 500 VDC.
5. DIELECTRIC STRENGTH : 1000 VAC RMS 60Hz, 1MIN.

MECHANICAL:

1. HOUSING MATERIAL : GLASS FILLED POLYESTER UL94V-0.
2. CONTACT MATERIAL : PHOSPHOR BRONZE t=0.35mm.
3. (3) PLATING : GOLD PLATING OVER NICKEL.
4. OPERATING LIFE : 750 CYCLES MIN.
5. PCB RETENTION PRE-SOLDER : 1 LB MIN.
6. PCB RETENTION POST-SOLDER: 10 LBS MIN.

ENVIRONMENTAL:

1. STORAGE : -40°C TO +85°C.
2. (3) OPERATION : -40°C TO +85°C.

MATES WITH MODULAR PLUG CONFORMING TO FCC PART 68, SUBPART F.

PART NUMBER: E528X-3XEX4X

- X: 4--8P4C, 6--8P6C, 8--8P8C
- 3: SHIELD: 1-TIN, 2-NICKEL
- E: 0--A06-0100 BK (1), 1--A06-0080 BK
- 4: 1- 3u" 2- 6u", 3-15u" 4-30u", 5-50u"

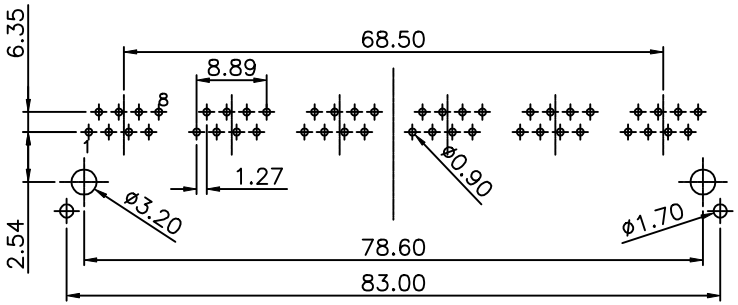

PC Board Layout

Component Side Shown

DETACHED LISTS	MM (INCH)	DFTO CZH	DATE 8/13/2002
	TOLERANCES EXCEPT AS NOTED	CHKD SMMY	DATE 2004/11/17
	MM .0 ±0.20 ± .00 ±0.15 ± .000 ±0.075 ±	MFO	DATE
		APPVL LUSHENG	DATE 2004/11/17
	ANGLES ±	MATERIAL :	
	THIRD ANGLE PROJECTION	QT'Y :	
		FINISH :	
		SCALE :	

FULL RISE ELECTRONIC CO., LTD

TITLE TOP ENTRY GANG JACK

DRAWING NO. GE523067 /PART NO. SEE NOTE

SIZE A3 REV 3

DO NOT SCALE DRAWING SHEET X OF Y