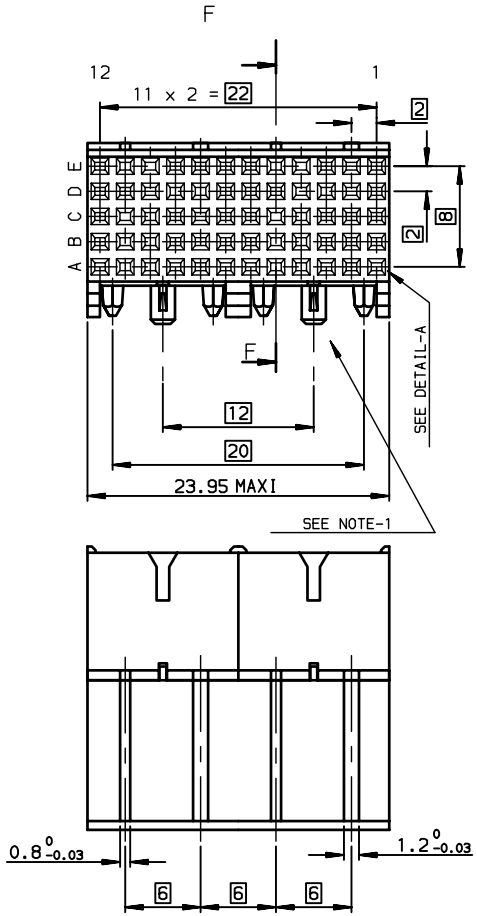

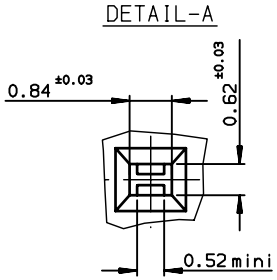

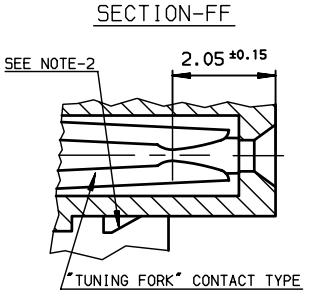

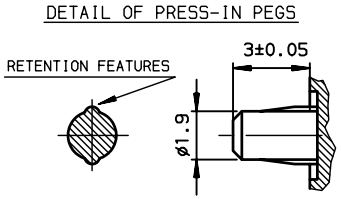

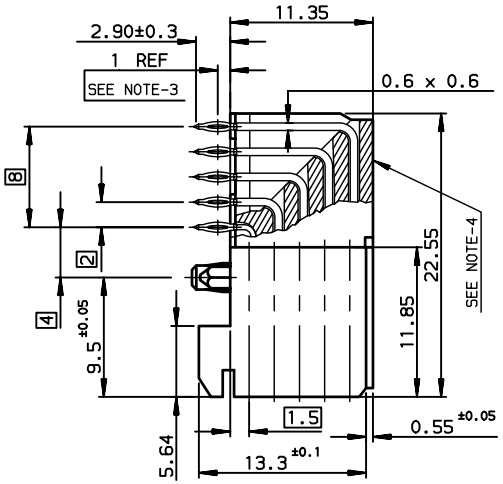

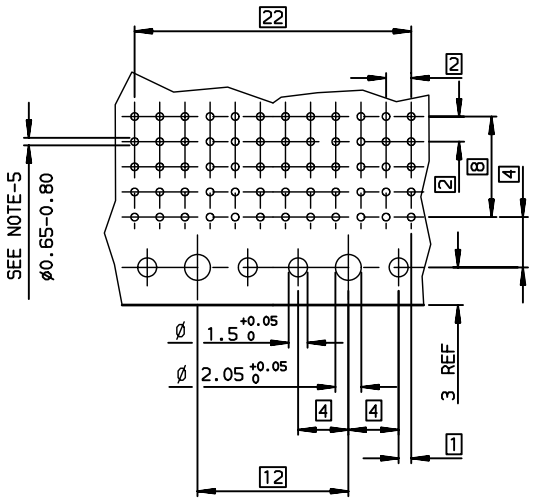

TIN LEAD PART NUMBER

Part Number:	HM1F52FDP400H6

LEAD FREE PART NUMBER

Part Number:	HM1F52FDP400H6LF

NOTE-1: PRESS-IN RETENTION PEG

NOTE-2: PLUG FOR CODING KEY FIXING

NOTE-3: EYE OF THE NEEDLE PRESS-FIT CTS TYPE

NOTE-4: FLAT ROCK INSERTION TOOLING IN PCB, SEE DRW REF:C-8626-1003

NOTE-5: METALIZED HOLE DEFINITION,SEE GS-12-447

NOTE-6: STANDARD PACKAGING IS IN TUBE ,BUT IF SUFFIX "P" IS ADDED IN P/N ,PACKAGING IS IN TRAYS ,BUT CONNECTOR MARKING IS WITHOUT "P"
Example: HM1FxxxxxxxxH6PLF, marking: HM1FxxxxxxxxH6LF

SPECIFIC DATAS:

VISUAL INSPECTION: 100%
- marking failure
- housing material failure
- spoilt housing
- stained housing
- broken contacts (twisted or loosen)

GENERAL CHARACTERISTICS AND ROHS INFORMATIONS:
SEE GS-12-447

European Views

rev	ecn no	dr	date
A	-	-	-
B	LS05-004	MLE	2005/02/11
C	LS06-0092	MLE	2006/06/01
D	LS06-0159	MLE	2006/10/24
E	LS07-0266	MLE	2007/11/09
-	-	-	-
-	-	-	-

www.fciconnect.com			surface ISO 1302	tolerance std ISO 406 ISO 1101		projection	mm
			TOLERANCES UNLESS OTHERWISE SPECIFIED				
Dr	PERRICHOT	2001/06/26	ANGULAR	LINEAR	0.X ±0.1	size A3	Scale 2.5
Eng	LENOIR	2001/06/26			0.XX ±0.1		
Chr	LEGARE	2001/06/26	0.XX° ±2°		0.XXX ±0.1	ECN	LS07-0266
Appr	LEGARE	2001/06/26	Product family		METRAL	Spec ref	-
title	METRAL FEMALE 5 ROWS 60 CTS REIGHT ANGLE PF					dwg no	C-8626-11139 Rev. E
catalog no			-			CUSTOMER	sheet 1 of 1

Copyright FCI.

REV F - 2006-04-17

PDM: Rev:E STATUS:Released Printed: Jun 18, 2009