Copyright FCI.

FCIconnect.com

# PRELIMINARY DRAWING

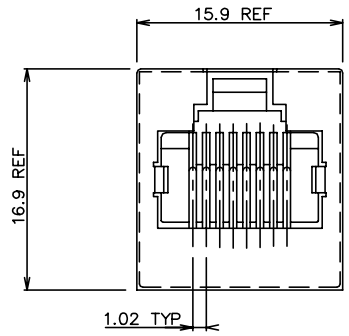


| P/N | WIRE NUMBERS LOADED | PLATING | DIM A | |
|---|---|---|---|---|
| 91139-088 | ALL | 5u" Au + high performance lubricant | 3.20±0.50 | |
| 91139-588 | ALL | 50u " G.X.T. | 3.20±0.50 | |
| 91139-088LF | ALL | 5u" Au + high performance lubricant | 3.20±0.50 | |
| 91139-588LF | ALL | 50u " G.X.T. | 3.20±0.50 | |
| 91139-088SLF | ALL | 5u" Au + high performance lubricant | 1.50±0.30 | ② |
| 91139-088SHLF | ALL | 5u" Au + high performance lubricant | 1.50±0.30 | ② |

LEAD FREE PRODUCT NO.
MEETS PIP PROCESS PRODUCT NO.

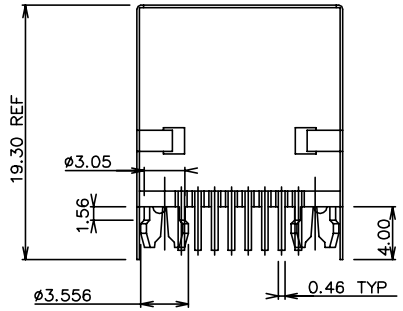


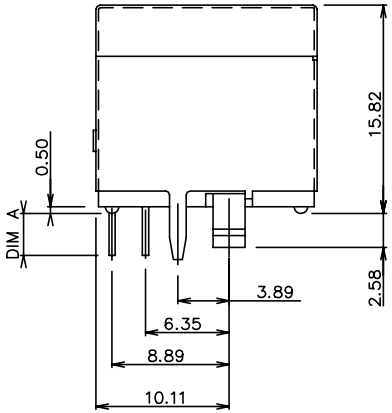


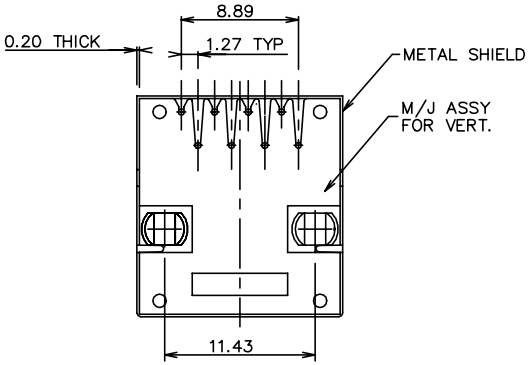


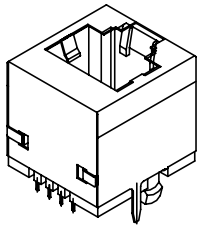

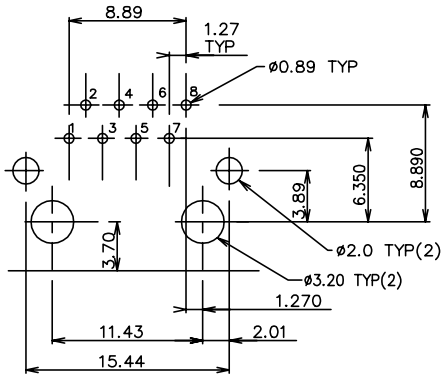


RECOMMENDED PC BOARD LAYOUT

PCB GENERALLY TOLERANCE: ±0.05

NOTES:

1. RECOMMENDED P.C.B THICKNESS 1.60 MM EXCEPT -XXXSLF
2. ② 91139 -XXXSLF & -XXXSHLF ARE CUSTOMER SPECIAL REQUIREMENT, THERE IS A MYLAR, AND CUSTOMER CHOOSES HIS OWN PCB.
3. HOUSING MAT'L: NYLON UL 94V-0, BLACK.
4. CONTACTS: COPPER ALLOY, PLATING SEE TABLE.
5. METAL SHELL MATERIAL:
   COPPER ALLOY, 0.20mm THICK
   FOR 91139-XXX
   FINISH: TIN-LEAD 100 " THICK MIN.
   FOR 91139-XXXLF
   FINISH: UNDERPLATING WITH 50u" MIN. NICKEL
   OVERPLATING WITH 80u" MIN PURE BRIGHT TIN
6. PACKAGING: GES-14-2261, USE TRAY
7. PRODUCT SPEC: GS-12-083.
8. IF LF P/N THE PRODUCT MEETS EUROPEAN UNION DIRECTIVES AND OTHER COUNTRY REGULATIONS AS DESCRIBED IN GS-22-008
9. IF LF P/N THE HOUSING WILL WITHSTAND EXPOSURE TO 260°C PEAK TEMPERATURE FOR 10 SECONDS IN A WAVE SOLDER APPLICATION WITH A 1.60mm MINIMUM THICK CIRCUIT BOARD
10. IF LF P/N PACKAGING MEETS GS-14-920 SPECIFICATION

| mat'l. code | | | | surface | tolerance | projection | product family |
|---|---|---|---|---|---|---|---|
| | | | | ISO1302 | ISO1101 ISO406 | | MOD JACK |
| ltr | ecn no | dr | date | tolerances unless otherwise specified | | | title |
| E | T03-0443 | WL | 10/06/03 | angle | linear 0.X±0.3 | mm | 8 POS VERT PCB. M/J ASSY SHIELDED, WITHOUT PANEL STOP |
| F | N04-0040 | ZC | 08/16/04 | | 0.XX±0.15 | | |
| G | N04-0115 | YS | 12/06/04 | 0°±2° | 0.XXX±0.05 | scale 2.0 | |
| H | ELX-N-004620 | SH MAO | 07/22/11 | dr | C L FENG 4/17/'95 | | dwg no 91139 sheet 1 of 1 size A4 |
| J | ELX-N-010984 | SH MAO | 3/14/12 | engr | TONY CHIEN 4/17/'95 | | |
| K | ELX-N-13758 | HE | 2012-12-26 | chr | TONY CHIEN 4/17/'95 | | |
| | | | | appd | JENN TSAO 4/17/'95 | | type Product Customer Drawing |
| sheet index | revision | J1 | | | | | |
| | sheet | 1 | | | | | |

form: A4mmXLc

PDS: Rev :K STATUS:Released Printed: Dec 28, 2012