X O

# VF140

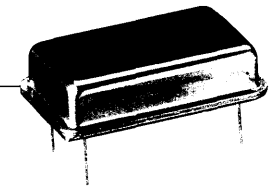

## HCMOS/TTL Compatible Clock Oscillators

### FEATURES

- Tristate Output Available
- Low Cost
- Industrial and Military Temperature Available
- Wide Frequency Range
- Very Low Phase Jitter

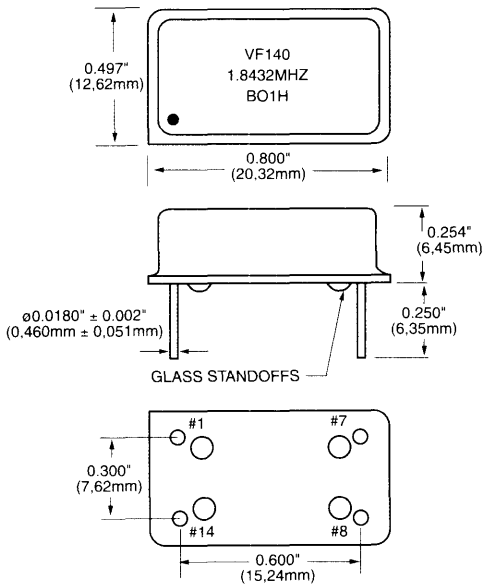


All dimensions are typical unless otherwise specified.

| | Parameter | Symb | Condition | Min | Typ | Max | Unit | Note |
|---|---|---|---|---|---|---|---|---|
| Absolute Max. Ratings | Input Break Down Voltage | Vcc | | -0.5 | | 7.0 | V | |
| | Storage Temp. | Ts | | -55 | | +125 | °C | |
| Electrical | Frequency Range | F | | 0.2 | | 130 | MHz | |
| | Frequency Stability | ΔF/F | Overall conditions including: calibration, temp., aging 10 yrs, shock, vibration | | | ±100 | ppm | 1 |
| | Input Voltage | Vcc | | 4.75<br>3.15 | 5.00<br>3.30 | 5.25<br>3.45 | V | Std.<br>LV Opt. |
| | Input Current | Icc | F = 50MHz 15pF, load Vcc 5V | | | 40 | mA | 2 |
| | Load | 10 TTL gates or 50pF Max. | | | | | | |
| | Duty Cycle | | @1.4V | 40 | 50 | 60 | % | 3 |
| | Rise/Fall Time | Tr/Tf | 0.4V to 2.4V<br>20% to 80% | | | 1.5<br>4.0 | ns | |
| | Logic "1" Level | Voh | Max Load | 0.9Vcc | | | V | |
| | Logic "0" Level | Vol | Max Load | | | 0.1Vcc | V | |
| | Start-up Time | Ts | | | 2 | 10 | ms | |
| | Phase Jitter | | 1σ | | | 1 | ps | fj>1KHz |
| | Tristate Function | Input HIGH (>2.5V) or floating: ACTIVE<br>Input LOW (<0.5V): INFINITE IMPEDANCE | | | | | | |
| | Enable Time | | | | | 100 | ns | |
| Environmental and Mechanical | Operating Temperature Range | 0°C to +70°C (-40°C to +85°C, -55°C to +125°C available) | | | | | | |
| | Mechanical Shock | Per MIL-STD-202, Method 213, Cond. E | | | | | | |
| | Thermal Shock | Per MIL-STD-883, Method 1011, Cond. A | | | | | | |
| | Vibration | Per MIL-STD-883, Method 2007, Cond. A | | | | | | |
| | Soldering Conditions | 260°C, for 10s, Max. | | | | | | |
| | Hermetic Seal | Leak rate less than 5 x $10^{-8}$ atm.cc/s of helium | | | | | | |
| Electrical Connections | Pin Out | Pin #1-Tristate Control or N/C<br>Pin #3-Output | | | Pin #2-Ground, Case<br>Pin #4-Vcc | | | |

Notes:
1. Standard frequency stability (±20, ±25, ±50, others available).
2. Current is load and frequency dependent.
3. Tighter duty cycles available.

All specifications are subject to change without notice.

Creating a Part Number

**VF140** [ ][ ][ ] - [ ] - [ ][ ] - **FREQ.**

**FREQUENCY STABILITY**

| Code | Specification |
|---|---|
| S | ±20 ppm |
| A | ±25 ppm |
| B | ±50 ppm |
| | ±100 ppm (std.) |
| C | ±500 ppm |

**DUTY CYCLE**

| Code | Specification |
|---|---|
| HH | ±2.5% |
| H | ±5% |
| | ±10% (std.) |

**INPUT VOLTAGE**

| Code | Specification |
|---|---|
| L | 3.3 Volt |
| | 5.0 Volt (std.) |

**OPERATIONAL TEMP. RANGE**

| Code | Specification |
|---|---|
| | 0°C to +70°C (std.) |
| 1 | -40°C to +85°C |
| 2 | -55°C to +125°C* |

*Not always available

**LEAD CONFIGURATION**

| Code | Specification |
|---|---|
| G | Gull Wing |
| | Through hole |

**OUTPUT**

| Code | Specification |
|---|---|
| T | Tristate |
| | Std. |

Example: VF140BL-1-1.8432MHz: Frequency Stability ±50ppm, Duty Cycle ±10%, Input Voltage 3.3 Volt ±5%, Operating Temperature -40°C to +85°C, Output Non-Tristate, Lead Configuration Straight, Frequency 1.8432MHz.



ValpeyFisher 75 South Street, Hopkinton, MA 01748 800-982-5737 508-435-6831 Fax: 508-435-5289 www.valpeyfisher.com