MICRO SWITCH
a Honeywell Division
FED. MFG. CODE 91929

SWITCH – BASIC

CATALOG LISTING
1DM57

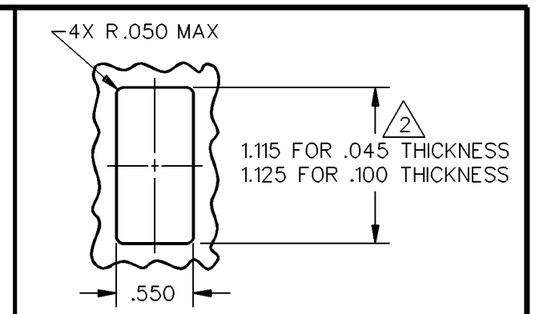

PANEL HOLE DETAIL
SCALE FULL

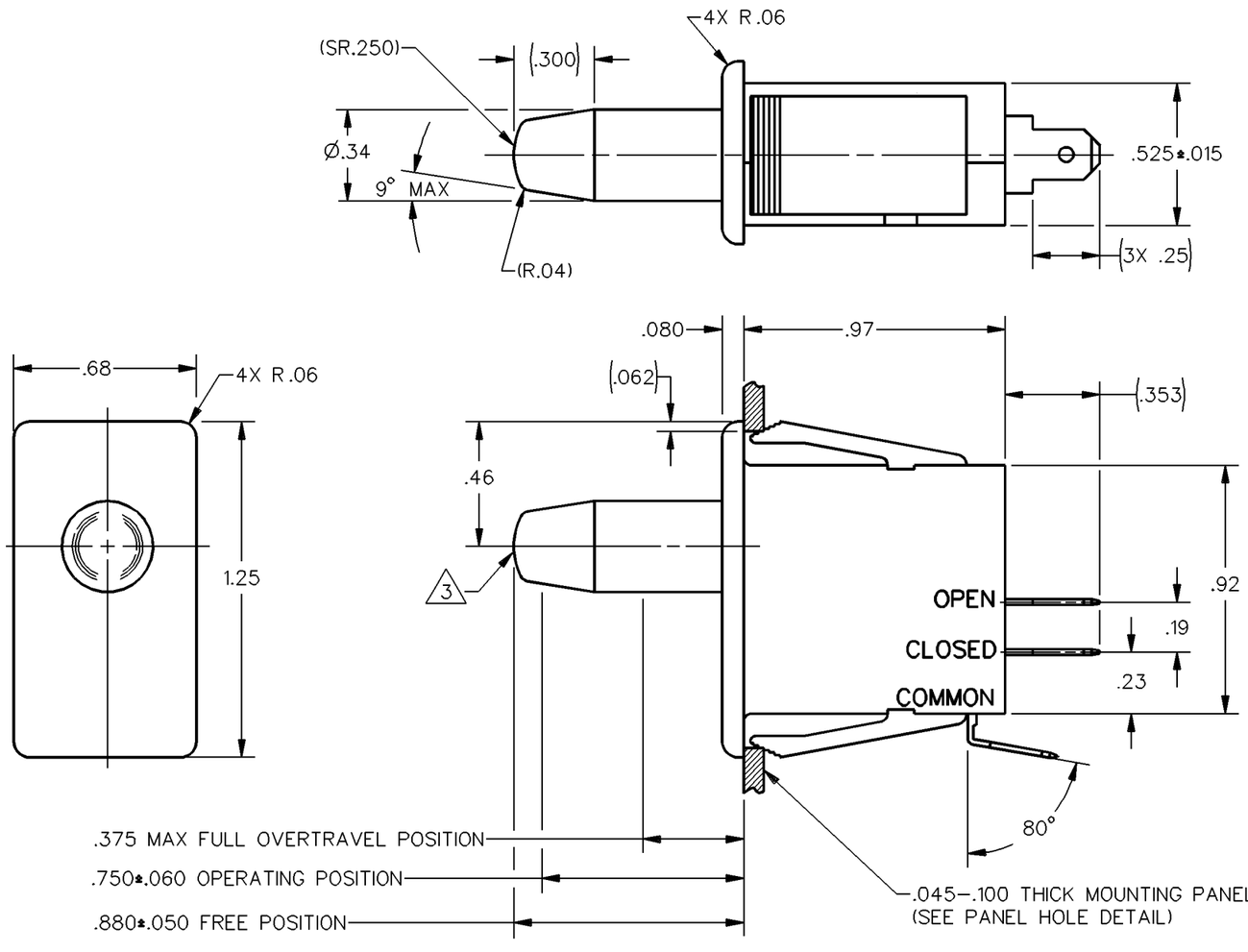

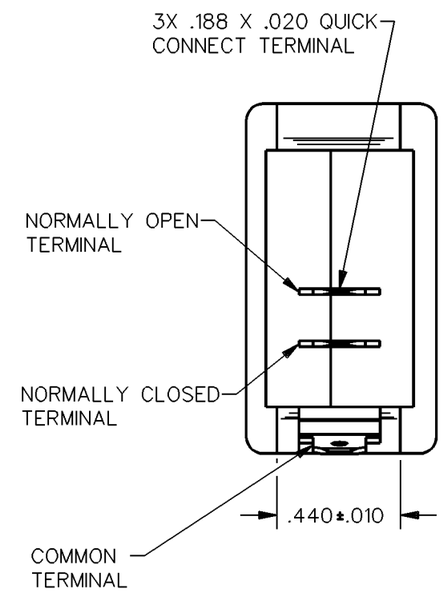

NOTES
1 – BLACK PLASTIC CASE AND PLUNGER
2 NOMINAL CUTOUT DIMENSION FOR PANELS BETWEEN .045 AND .100 SHOULD BE INTERPOLATED BETWEEN 1.115 AND 1.125
3 PUSH TO OPERATE–MOMENTARY

THIS DRAWING COVERS A PROPRIETARY ITEM AND IS THE PROPERTY OF MICRO SWITCH. A DIVISION OF HONEYWELL. THIS DRAWING IS NOT TO BE COPIED OR USED WITHOUT THE APPROVAL OF MICRO SWITCH

THIRD ANGLE PROJECTION
SCALE 2 TO 1
DO NOT SCALE PRINT

CHARACTERISTICS

OPERATING FORCE – – – – – 15 OZ MAX
RELEASE FORCE– – – – – – – 3 OZ MIN
DIFFERENTIAL TRAVEL – – .045 APPROX
OVERTRAVEL – – – – – – – – .375 MIN
PLUNGER FORCE – – – – – – 21 OZ MAX
(AT .375 OVERTRAVEL)

ELECTRICAL DATA

CONTACT ARRANGEMENT
S P D T

L181
10A 1/2HP 125, 250 OR 277 VAC

UNLESS OTHERWISE SPECIFIED TOLERANCES ARE

ONE PLACE	(.0)	±.030
TWO PLACE	(.00)	±.015
THREE PLACE	(.000)	±.005
ANGLES		± 5°

WEIGHT

ANSI Y14.5M–1982 APPLIES

CATALOG LISTING 1DM57
ISSUE 8
REPLACES
RELEASE NO. PR–602
CHECK
REVISIONS
A CO–72328 WJC 5 OCT 92
CHECK
CHECK
CHECK
DRAWN WJC 5 OCT 92
DDM/CAD