HMOS* 8-BIT MICROPROCESSOR UNIT (MPU)

DESCRIPTION

The EF 6809E is a revolutionary high-performance 8-bit microprocessor which supports modern programming techniques such as position independence, reentrancy, and modular programming.
This third-generation addition to the EF 6800 Family has major architectural improvements which include additional registers, instructions, and addressing modes.
The basic instructions of any computer are greatly enhanced by the presence of powerful addressing modes. The EF 6809E has the most complete set of addressing modes availables on any 8-bit microprocessor today.
The EF 6809E has hardware and software features which make it an ideal processor for higher level language execution or standard controller applications. External clock inputs are provided to allow synchronization with peripherals, systems, or other MPUs.

MAIN FEATURES

EF 6800 compatible

- Hardware - interfaces with all EF 6800 peripherals.
- Software - upward source code compatible instruction set and addressing modes.

Architectural features

- Two 16-bit index registers.
- Two 16-bit indexable stack pointers.
- Two 8-bit accumulators can be concatenated to form one 16-bit accu mulator.
- Direct page register allows direct addressing throughout memory.

Hardware features

- External clock inputs, E and Q, allows synchronization.
- TSC input controls internal bus buffers.
- LIC indicates opcode fetch.
- ACMA allows efficient use of common ressources in a multiprocessor ststem.
- BUSY is a status line for multiprocessing.
- Fast interrupt request input stacks only condition code register and program counter.
- Interrupt acknowledge output allows vectoring by devices.
- Sync acknowledge output allows for syncronization to external event.
- Single bus-cycle RESET.
- Single 5-volt supply operation.
- NMI inhibited after RESET until after first load of stack pointer.
- Early address valid allows use with slower memories.
- Early write data for dynamic memories.

Software features

- 10 addressing modes :
  - EF 6800 upward compatible addressing modes,
  - direct addressing anywhere in memory map,
  - long relative branches,
  - program counter relative,
  - true indirect addressing,
  - expended indexed addressing :
    - 0-, 5-, 8- or 16-bit constant offsets,
    - 8- or 16-bit accumulator offsets,
    - auto increment/decrement by 1 or 2.
- Improved stack manipulation.
- 1464 instructions with unique addressing modes.
- 8 x 8 unsigned multiply.
- 16-bit arithmetic.
- Transfer/exchange all registers.
- Push/pull any registers or any set of registers.
- Load effective address.
- Processor speed 1 and 1.5 MHz over military temperature range.

SCREENING / QUALITY

This product could be manufactured in full compliances with either :

- CECC 90000 (class B, assessment level Y).
- MIL-STD-883 (class B).
- or according to TMS standards.

* High density, N channel silicon gate.

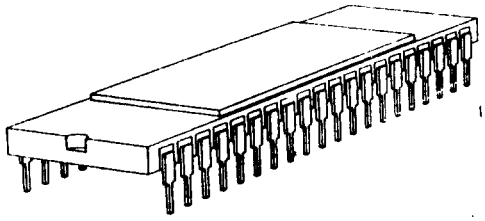

C suffix
DIL 40
Ceramic Side Brazed package

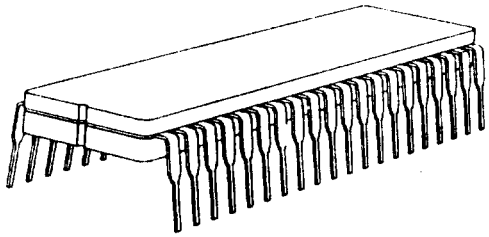

J suffix
DIL 40
Ceramic Cerdip package

See the ordering information page 49.

Pin connection : see page 48.

SUMMARY

A - GENERAL DESCRIPTION

1 - EF 6809E EXPANDED BLOCK DIAGRAM

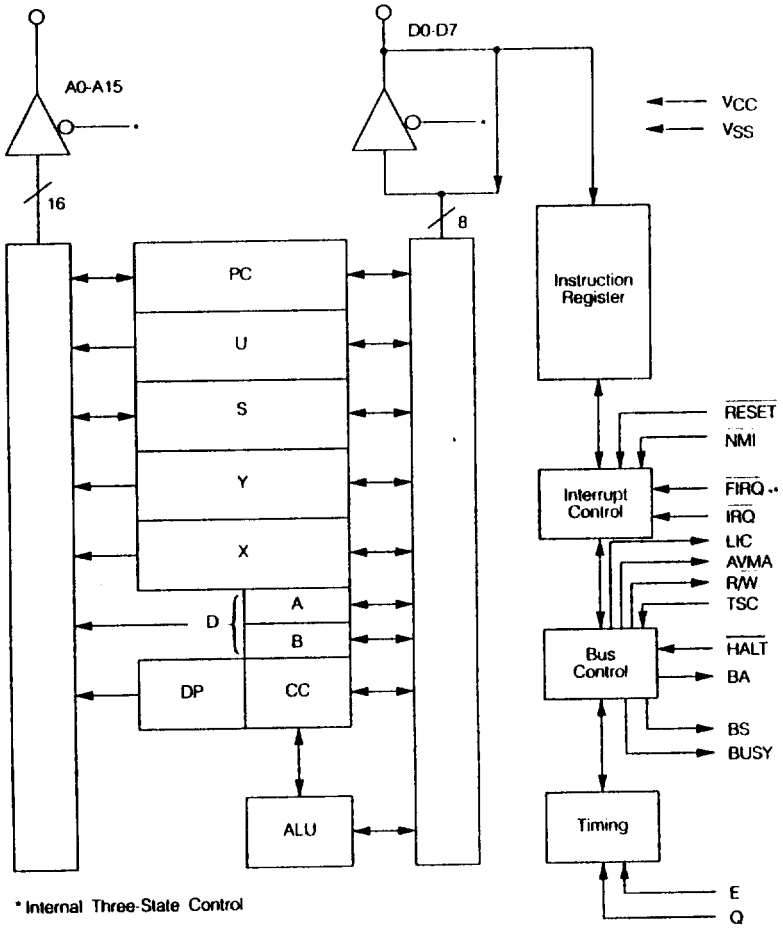

Figure 1 : EF 6809E expanded block diagram.

2 - SIGNAL DESCRIPTION

POWER (V_{SS}, V_{CC})

Two pins are used to supply power to the part : V_{SS} is ground or 0 volts, while V_{CC} is +5.0 V ±5 %.

ADDRESS BUS (A0-A15)

Sixteen pins are used to output address information from the MPU onto the address bus. When the processor does not require the bus for a data transfer, it will output address $FFFF_{16}$, $R/\overline{W}$ = 1, and BS = 0 ; this is a «dummy access» or $\overline{VMA}$ cycle. All address bus drivers are made high-impedance when output bus available (BA) is high or when TSC is asserted. Each pin will drive one Schottky TTL load or four LSTTL loads, and 90 pF.

DATA BUS (D0-D7)

These eight pins provide communication with the system bidirectional data bus. Each pin will drive one Schottky TTL load or four LSTTL loads, and 130 pF.

READ/WRITE ($R/\overline{W}$)

This signal indicates the direction of data transfer on the data bus. A low indicates that the MPU is writing data onto the data bus. $R/\overline{W}$ is made high impedance when BA is high or when TSC is asserted.

$\overline{RESET}$

A low level on this Schmitt-trigger input for greater than one bus cycle will reset the MPU, as shown in Figure 2. The reset vectors are fetched from locations $FFFE_{16}$ and $FFFF_{16}$ (Table 1) when interrupt acknowledge is true, ($\overline{BA}$ • BS = 1). During initial power on, the RESET line should be held low until the clock input signals are fully operationnal.

Because the EF 6809E $\overline{RESET}$ pin has a Schmitt-trigger input with a threshold voltage higher than that of standard peripherals, a simple R/C network may be used to reset the entire system. This higher threshold voltage ensures that all peripherals are out of the reset state before the processor.

HALT

A low level on this input pin will cause the MPU to stop running at the end of the present instruction and remain halted indefinitely without loss of data. When halted, the BA output is driven high indicating the buses are high impedance. BS is also high which indicates the processor is in the halt state. While halted, the MPU will not respond to external real-time requests ($\overline{FIRQ}$, $\overline{IRQ}$) although $\overline{NMI}$ or $\overline{RESET}$ will be latched for later response. During the halt state, Q and E continue to run-normally. A halted state (BA • BS = 1) can be achieved by pulling $\overline{HALT}$ low while $\overline{RESET}$ is still low. See Figure 3.

BUS AVAILABLE, BUS STATUS (BA, BS)

The bus available output is an indication of an internal control signal which makes the MOS buses of the MPU high impedance. When BA goes low, a dead cycle will elapse before the MPU acquires the bus. BA will not be asserted when TSC is active, thus allowing dead cycle consistency.

The bus status output signal, when decoded with BA, represents the MPU state (valid with leading edge of Q).

MPU state		MPU state definition
BA	BS	
0	0	Normal (running)
0	1	Interrupt or reset acknowledge
1	0	Sync acknowledge
1	1	Halt acknowledge

INTERRUPT ACKNOWLEDGE is indicated during both cycles of a hardware-vector-fetch ($\overline{RESET}$, $\overline{NMI}$, $\overline{FIRQ}$, $\overline{IRQ}$, SWI, SWI2, SWI3). This signal, plus decoding of the lower four address lines, can provide the user with an indication of which interrupt level is being serviced and allow vectoring by device. See Table 1.

Table 1 · Memory map for interrupt vectors

Memory map for vector locations		Interrupt vector description
MS	LS	
FFFE	FFFF	$\overline{RESET}$
FFFC	FFFD	$\overline{NMI}$
FFFA	FFFB	SWI
FFF8	FFF9	$\overline{IRQ}$
FFF6	FFF7	$\overline{FIRQ}$
FFF4	FFF5	SWI2
FFF2	FFF3	SWI3
FFF0	FFF1	Reserved

SYNC ACKNOWLEDGE is indicated while the MPU is waiting for external synchronization on an interrupt line.

HALT ACKNOWLEDGE is indicated when the EF 6809E is in a halt condition.

NON MASKABLE INTERRUPT ($\overline{NMI}$)*

A negative transition on this input requests that a non-maskable interrupt sequence be generated. A non-maskable interrupt cannot be inhibited by the program and also has a higher priority than $\overline{FIRQ}$, $\overline{IRQ}$, or software interrupts. During recognition of an $\overline{NMI}$, the entire machine state is saved on the hardware stack. After reset, an $\overline{NMI}$ will not be recognized until the first program load of the hardware stack pointer (S). The pulse width of NMI low must be at least one E cycle. If the $\overline{NMI}$ input does not meet the minimum set up with respect to Q, the interrupt will not the recognized until the next cycle. See Figure 4.

FAST-INTERRUPT REQUEST ($\overline{FIRQ}$)*

A low level on this input pin will initiate a fast interrupt sequence, provided its mask bit (F) in the CC is clear. This sequence has priority over the standard interrupt request ($\overline{IRQ}$), and is fast in the sense that it stacks only the contents of the condition code register and the program counter. The interrupt service routine should clear the source of the interrupt before doing an RTI. See Figure 5.

INTERRUPT REQUEST ($\overline{IRQ}$)*

A low level input on this pin will initiate an interrupt request sequence provided the mask bit (I) in the CC is clear. Since $\overline{IRQ}$ stacks the entire machine state, it provides a slower response to interrupts than $\overline{FIRQ}$. $\overline{IRQ}$ also has a lower priority than $\overline{FIRQ}$. Again, the interrupt service routine should clear the source of the interrupt before doing an RTI. See Figure 4.

* $\overline{NMI}$, $\overline{FIRQ}$, and $\overline{IRQ}$ requests are sampled on the falling edge of Q. One cycle is required for synchronization before these interrupts are recognized. The pending interrupt(s) will not be serviced until completion of the current instruction unless a SYNC or CWAI condition is present. If $\overline{IRQ}$ and $\overline{FIRQ}$ do not remain low until completion of the current instruction they may not be recognized. However, $\overline{NMI}$ is latched and need only remain low for one cycle. No interrupts are recognized or latched between the falling edge of $\overline{RESET}$ and the rising edge of BS indicating $\overline{RESET}$ acknowledge. See $\overline{RESET}$ sequence in the MPU flowchart in Figure 14.

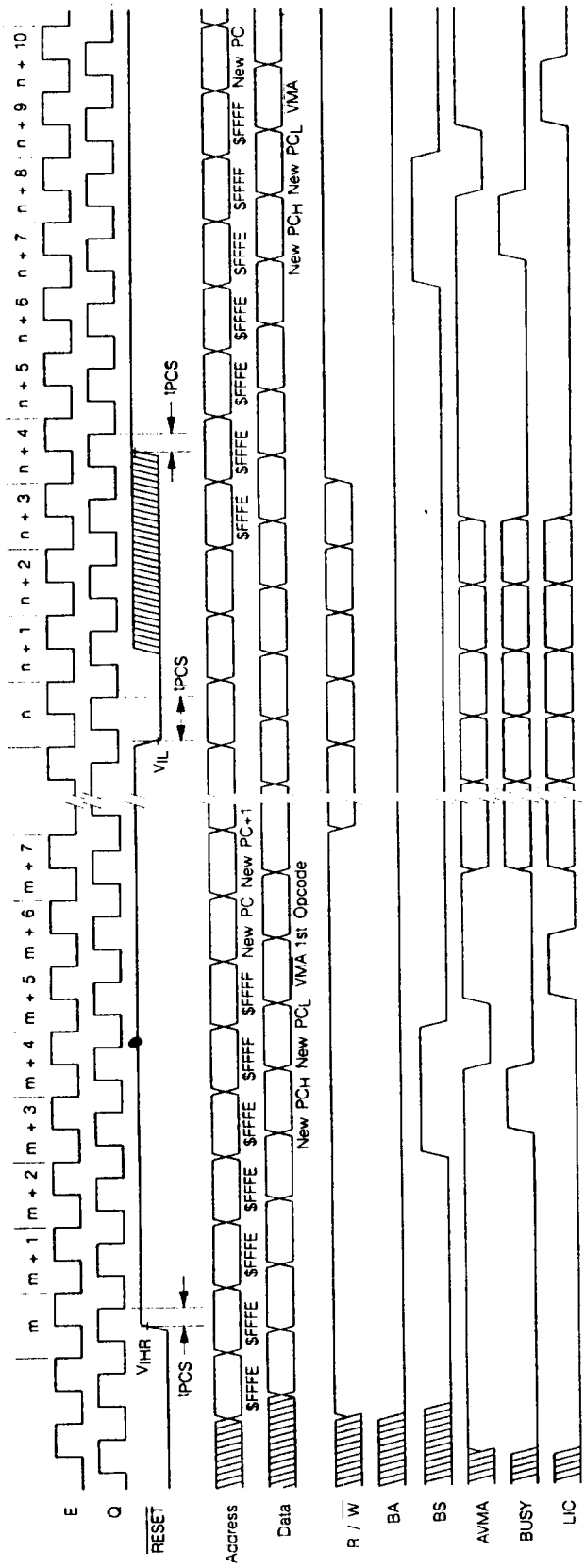

Note : Timing measurements are referenced to and from a low voltage of 0.8 volts and a high voltage of 2.0 volts, unless otherwise noted.

Figure 2 : $\overline{\text{RESET}}$ timing

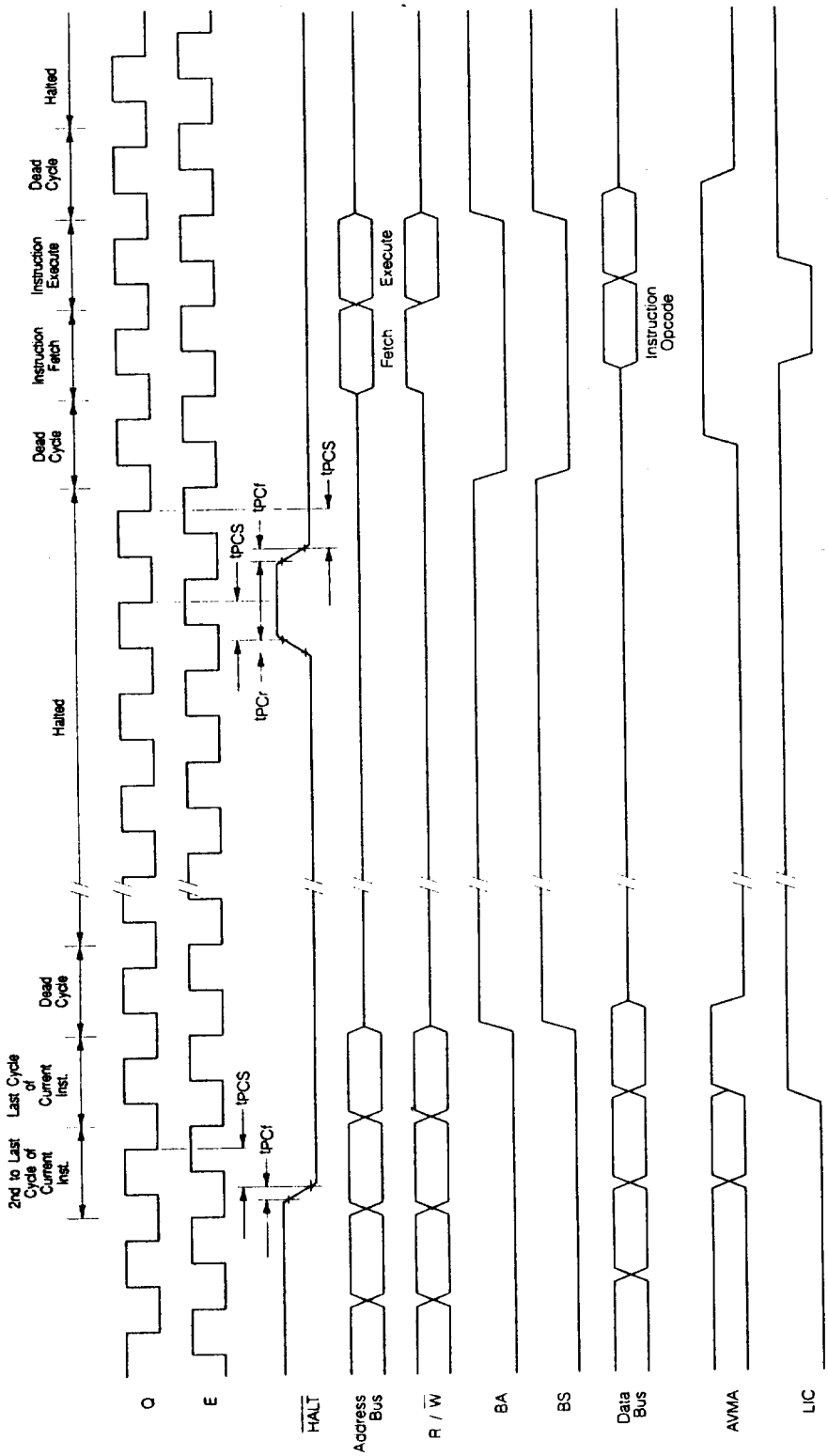

Note: Timing measurements are referenced to and from a low voltage of 0.8 volts and a high voltage of 2.0 volts, unless otherwise noted.

Figure 3: $\overline{\text{HALT}}$ and single instruction execution timing for system debug.

CLOCK INPUTS E, Q

E and Q are the clock signals required by the EF 6809E. Q must lead E ; that is, a transition on Q must be followed by a similar transition on E after a minimum delay. Addresses will be valid from the MPU, t_{AD} after the faling edge of E. While the Q input is fully TTL compatible, the E input directly drives internal MOS circuitry and, thus, requires a high level above normal TTL levels. This approach minimizes clock skew inherent with an internal buffer. Refer to BUS TIMING CHARACTERISTICS for E and Q and to Figure 6 which shows a simple clock generator for the EF 6809E.

BUSY

BUSY will be high for the read and modify cycles of a read-modify-write instruction and during the access of the first byte of a double-byte operation (e.g., LDX, STD, ADDD). BUSY is also high during the first byte of any indirect or other vector fetch (e.g., jump extended, SWI indirect, etc.).

In a multiprocessor system, BUSY indicates the need to defer the rearbitration of the next bus cycle to insure the integrity of the above operations. This difference provides the indivisible memory access required for a «test-and-set» primitive, using any one of several read-modify-write instructions.

BUSY does not become active during PSH or PUL operation. A typical read-modify-write instruction (ASL) is shown in Figure 7. Timing information is given in Figure 8. BUSY is valid t_{CD} after the rising edge of Q.

AVMA

AVMA is the advanced VMA signal and indicates that the MPU will use the bus in the following bus cycle. The predictive nature of the AVMA signal allows efficient shared-bus multiprocessor systems. AVMA is low when the MPU is in either a $\overline{HALT}$ or SYNC state. AVMA is valid t_{CD} after the rising edge of Q.

LIC

LIC (last instruction cycle) is high during the last cycle of every instruction, and its transition from high to low will indicate that the first byte of an opcode will be latched at the end of the present bus cycle. LIC will be high when the MPU is halted at the end of an instruction (i.e., not n CWAI or $\overline{RESET}$), in sync state, or while stacking during interrupts. LIC is valid t_{CD} after the rising edge of Q.

TSC

TSC (three-state control) will cause MOS address, data, and R/$\overline{W}$ buffers to assume a high-impedance state. The control signals (BA, BS, BUSY, AVMA and LIC) will not go to the high-impedance state. TSC is intended to allow a single bus to be shared with other bus masters (processors or DMA controllers).

While E is low, TSC controls the address buffers and R/$\overline{W}$ directly. The data bus buffers during a write operatin are in a high-impedance state until Q rises at which time. if TSC is true, they will remain in a high-impedance stae. If TSC is held beyond the rising edge of E, then it will be internally latched, keeping the bus drivers in a high-impedance state for the remainder of the bus cycle. See Figure 9.

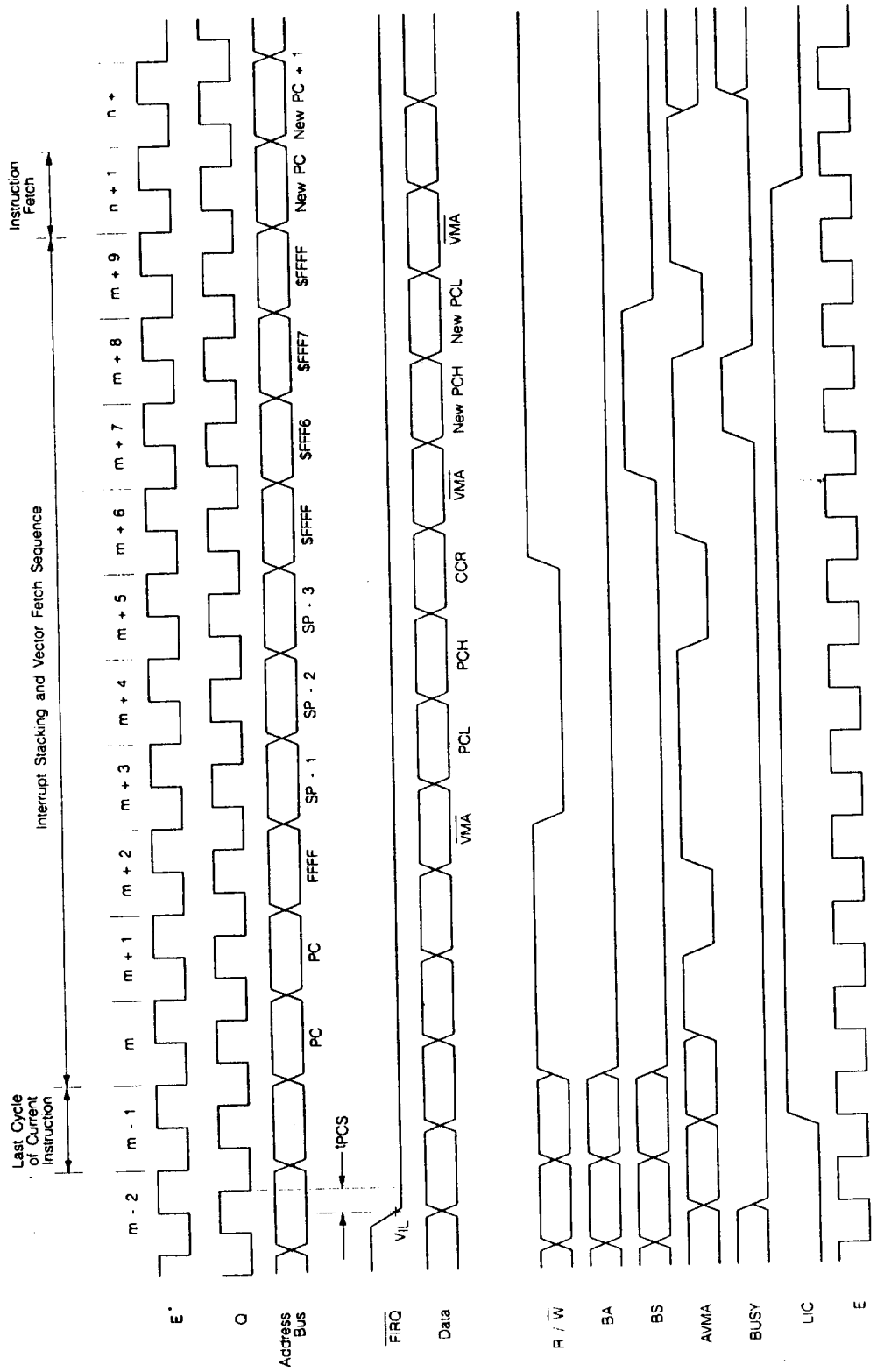

* E clock chown for reference only.

Note: Timing measurements are referenced to and from a low voltage of 0.8 volts and a high voltage of 2.0 volts, unless otherwise noted.

Figure 4 : $\overline{IRQ}$ and $\overline{NMI}$ interrupt timing.

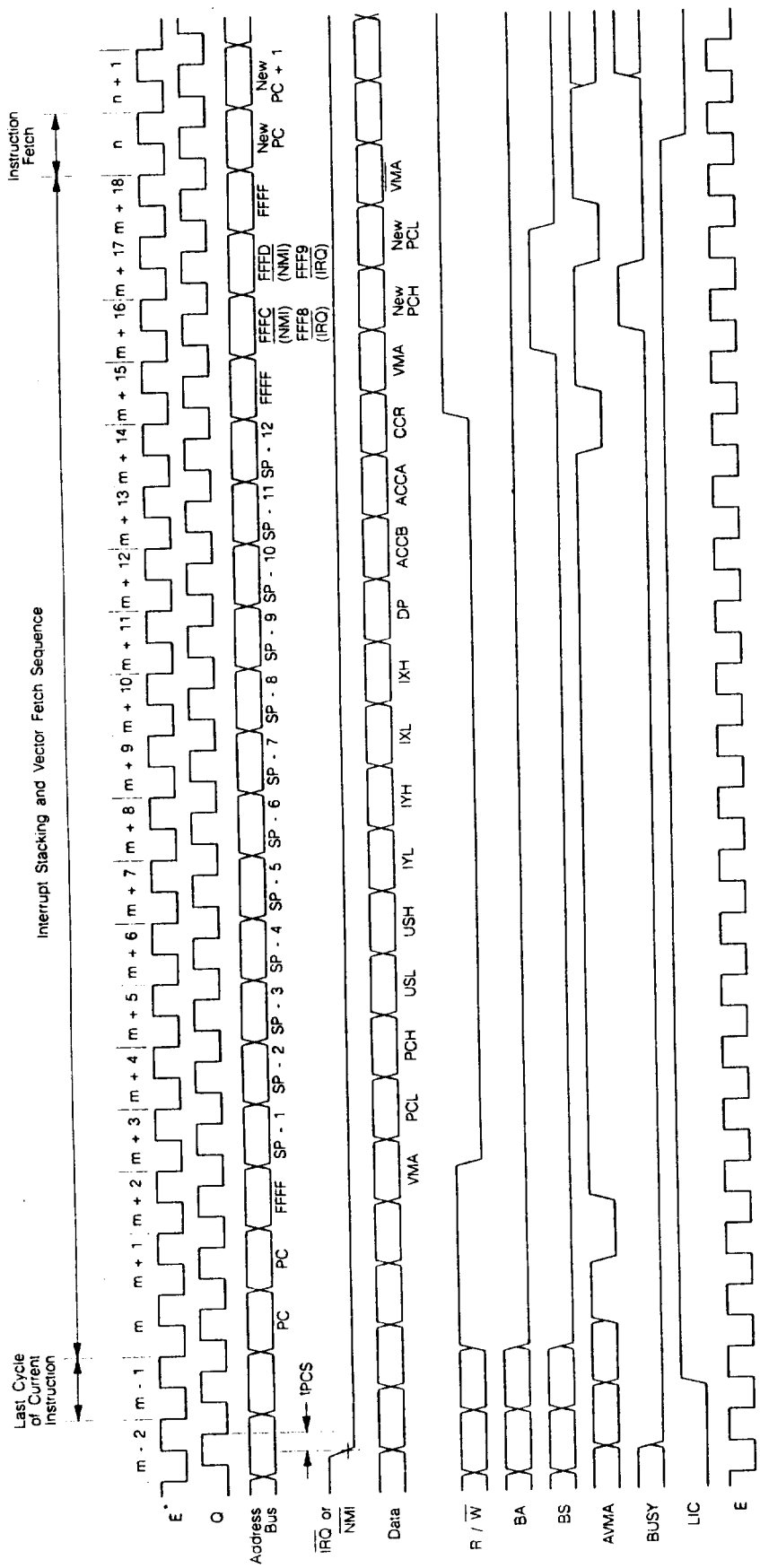

* E clock chown for reference only.
Note : Timing measurements are referenced to and from a low voltage of 0.8 volts and a high voltage of 2.0 volts, unless otherwise noted.

Figure 5 : $\overline{FIRQ}$ interrupt timing.

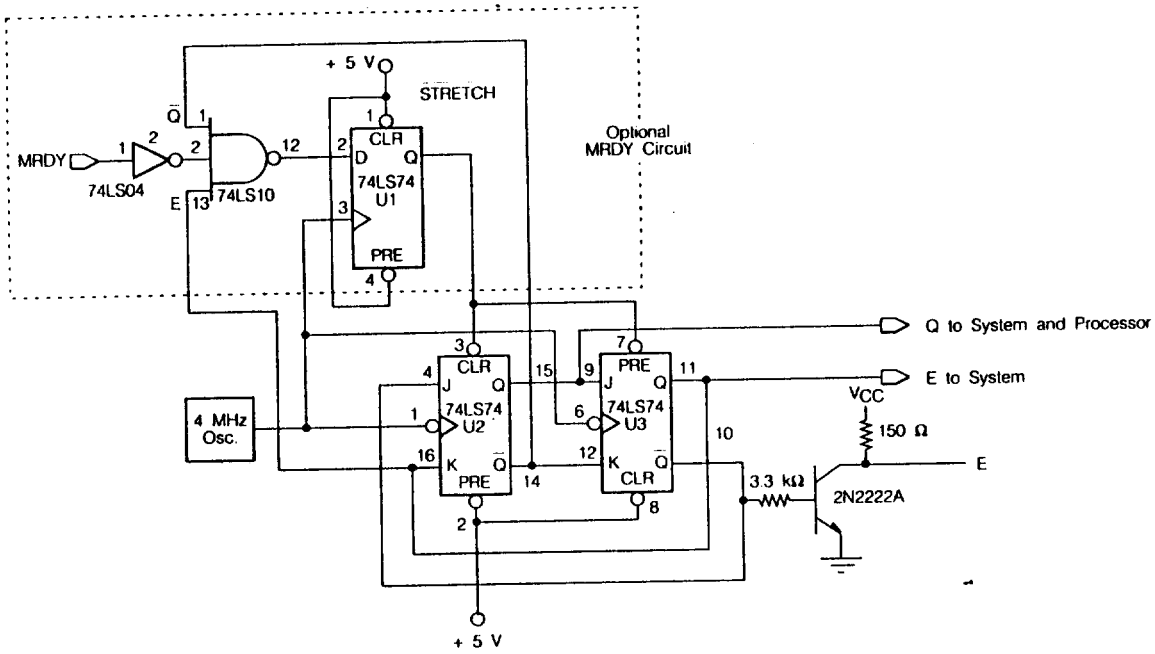

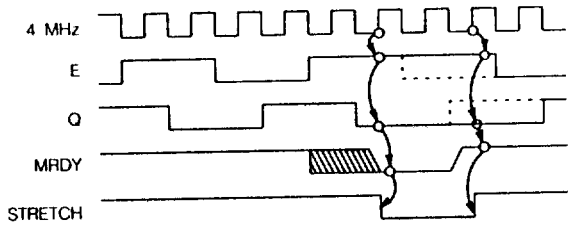

Note : If optional circuit is not included the CLR and PRE inputs of U2 and U3 must be tied high.

Figure 6 : Clock generator.

Memory Location	Memory Contents	Contents Description
PC → $0200	$68	ASL Indexed Opcode
$0201	$9F	Extended Indirect Postbyte
$0202	$63	Indirect Address Hi-Byte
$0203	$00	Indirect Address Lo-Byte
$0204		Next Main Instruction
$6300	$E3	Effective Address Hi-Byte
$6301	$D6	Effective Address Lo-Byte
$E3D6	$5C	Target Data

Figure 7 : Read-modify-write instruction example (ASL extended indirect).

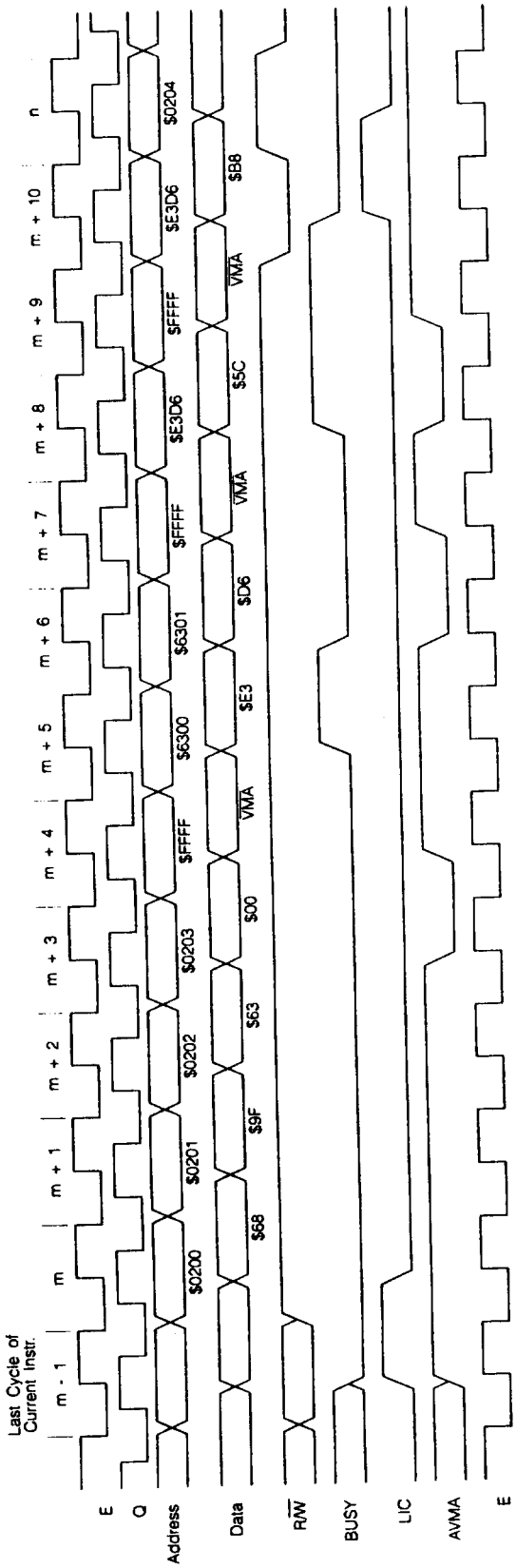

Figure 8 : BUSY timing.

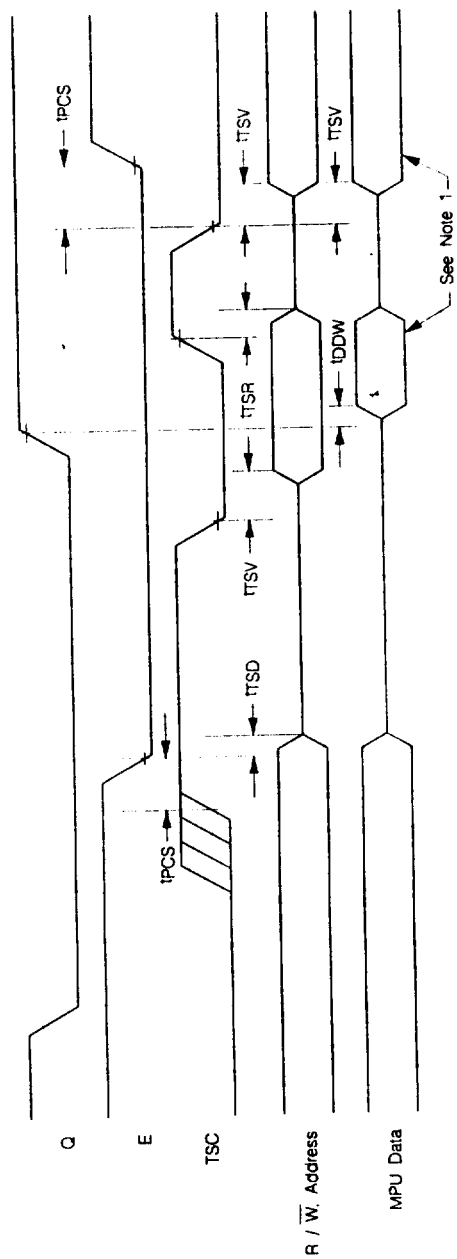

Note 1 : Data will be asserted by the MPU only during the interval while R/W is low and (E or Q) is high. A composite bus cycle is shown to give most cases of timing.

Note 2 : Timing measurements are referenced to and from a low voltage of 0.8 volts and a high voltage of 2.0 volts, unless otherwise noted.

Figure 9 : TSC timing.

B - DETAILED SPECIFICATIONS

1 - SCOPE

This drawing describes the specific requirements for the microprocessor EF 6809, 1 and 1.5 MHz, in compliance either with MIL-STD-883 class B or CECC 90000.

2 - APPLICABLE DOCUMENTS

2.1 - MIL-STD-883

1) MIL-STD-883 : test methods and procedures for electronics
2) MIL-M-38510 : general specifications for microcircuits

3 - REQUIREMENTS

3.1 - General

The microcircuits are in accordance with the applicable document and as specified herein.

3.2 - Design and construction

3.2.1 - Terminal connections

Depending on the package, the terminal connections shall be is shown in figures 2 and 3.

3.2.2 - Lead material and finish

Lead material and finish shall be any option of MIL-M-38510 except finish C (as described in 3.5.6.1 of 38510).

3.2.3 - Package

The macrocircuits are packaged in hermetically sealed ceramic package which is conform to case outlines of MIL-M-38510 appendix C (when defined) :

- 40 leads DIP (for ceramic and cerdip packages)
- 44 terminals SQ. LCC (for leadless chip carrier package)

The precise case outlines are described on § 9.

3.3 - Electrical characteristics

3.3.1 - Absolute maximum ratings (see Table 2)

Table 2

Symbol	Parameter		Test conditions	Min	Max	Unit
V_{CC}	Supply voltage			−0.3	+7.0	V
V_I	Input voltage			−0.3	+7.0	V
P_{dmax}	Max Power dissipation		T_{case} = −55°C / +125°C		1.5	W
			T_{case} = +25°C		1	W
T_{case}	Operating temperature	M suffix EF 6809E/EF 68A09E	f = 1 and 1.5 MHz	−55	+125	°C
		V suffix EF 6809E/EF 68A09E	f = 1 and 1.5 MHz	−40	+85	°C
		No suffix EF 6809E/EF 68A09E EF 68B09E	f = 1, 1.5 and 2 MHz	0	+70	°C
T_{stg}	Storage temperature			−55	+150	°C
T_j	Junction temperature				+170	°C
T_{leads}	Lead temperature		Max 5 sec. soldering		+270	°C

This device contains protective circuitry against damage due to high static voltages or electrical fields ; however, it is advises that normal precautions be taken to avoid application of any voltages higher than maximum-rated voltages to this high-impedance circuit. Reliability of operation is enhanced if unused inputs are tied to an appropriate logic voltage level (e.g., either GND or V_{CC}).

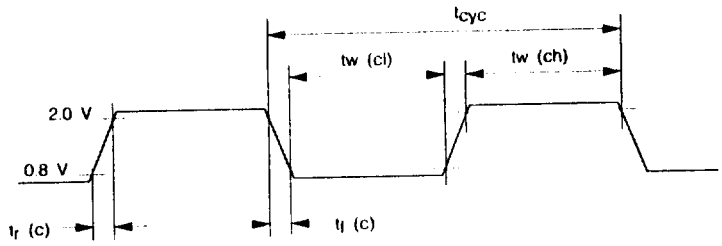

Note : Timing measurements are referenced to and from a low voltage of 0.8 volt and a high voltage of 2.0 volts, unless otherwise noted. The voltage swing through this range start outside, and pass through, the range such that the rise or fall will be linear between 0.8 volt and 2.0 volts.

3.4 · Thermal characteristics (at 25°C)

Table 3

Package	Symbol	Parameter	Value	Unit
40 ceramic DIL side brazed C suffix	θ_{JA}	Thermal resistance - Ceramic junction to ambient	50	°C/W
	θ_{JC}	Thermal resistance - Ceramic junction to case	10	°C/W
Cerdip 40 J suffix	θ_{JA}	Thermal resistance - Ceramic junction to ambient	60	°C/W
	θ_{JC}	Thermal resistance - Ceramic junction to case	10	°C/W

Power considerations

The average chip-junction temperature, T_J, in °C can be obtained from :

$$T_J = T_A + (P_D \cdot \theta_{JA}) \quad (1)$$

TA = Ambient Temperature, °C

θ_{JA} = Package Thermal Resistance, Junction-to-Ambient, °C/W

$P_D = P_{INT} + P_{I/O}$

$P_{INT} = I_{CC} \times V_{CC}$, Watts — Chip Internal Power

$P_{I/O}$ = Power Dissipation on Input and Output Pins – User Determined

For most applications $P_{I/O} < P_{INT}$ and can be neglected.

An approximate reliationship between P_D and T_J (if $P_{I/O}$ is neglected) is :

$$P_D = K \cdot (T_J + 273) \quad (2)$$

Solving equations (1) and (2) for K gives :

$$K = P_D \cdot (T_A + 273) + \theta_{JA} \cdot P_D^2 \quad (3)$$

where K is a constant pertaining to the particular part K can be determined from equation (3) by measuring P_D (at equilibrium) for a known T_A. Using this value of K, the values of P_D and T_J can be obtained by solving equations (1) and (2) iteratively for any value of T_A.

The total thermal resistance of a package (θ_{JA}) can be separated into two components, θ_{JC} and θ_{CA}, representing the barrier to heat flow from the semiconductor junction to the package (case), surface (θ_{JC}) and from the case to the outside ambient (θ_{CA}). These terms are related by the equation :

$$\theta_{JA} = \theta_{JC} + \theta_{CA} \quad (4)$$

θ_{JC} is device related and cannot be influenced by the user. However, θ_{CA} is user dependent and can be minimized by such thermal management techniques as heat sinks, ambient air cooling and thermal convection. Thus, good thermal management on the part of the user can significantly reduce θ_{CA} so that θ_{JA} approximately equals θ_{JC}. Substitution of θ_{JC} for θ_{JA} in equation (1) will result in a lower semiconductor junction temperature.

3.5 · Mechanical and environment

The microcircuits shall meet all mechanical environmental requirements of either MIL-STD-883 for class B devices or CECC 90000 devices.

3.6 · Marking

The document where are defined the marking are identified in the related reference documents. Each microcircuit are legible and permanently marked with the following information as minimum :

3.6.1 · Thomson logo

3.6.2 · Manufacturer's part number

3.6.3 · Class B identification

3.6.4 · Date-code of inspection lot

3.6.5 · ESD identifier if available

3.6.6 · Country of manufacturing

4 · QUALITY CONFORMANCE INSPECTION

4.1 · DESC / MIL-STD-883

Is in accordance with MIL-M-38510 and method 5005 of MIL-STD-883. Group A and B inspections are performed on each production lot. Group C and D inspection are performed on a periodical basis.

5 · ELECTRICAL CHARACTERISTICS

5.1 · General requirements

All static and dynamic electrical characteristics are specified for inspection purpose, refer to relevant specification.

Table 4 : Static electrical characteristics for all electrical variants. See § 5.2.

Table 5 : Dynamic electrical characteristics. See § 5.3.

For static characteristics, test methods refer to IEC 748-2 method number, where existing and see § 5.4.2.

For dynamic characteristics (Table 5), test methods refer to clause 5.4 hereafter of this specification.

Indication of «min.» or «max.» in the column «test temperature» means minimum or maximum operating temperature.

5.2 · Static characteristics

V_{CC} = 5.0 V_{dc} ±5 % ; V_{SS} = 0 V_{dc} ; T_C = −55 / +125°C or −40 / +85°C or 0 / +70°C.

Table 4

Symbol	Characteristic		Min	Typ	Max	Unit
V_{IH} V_{IHR} V_{IHC}	Input high voltage	Logic, Q $\overline{RESET}$ E	V_{SS} +2.0 V_{SS} +4.0 V_{CC} −0.75		V_{CC} V_{CC} V_{CC} +0.3	V V V
V_{IL} V_{ILC} V_{ILQ}	Input low voltage	Logic, $\overline{RESET}$ E Q	V_{SS} −0.3 V_{SS} −0.3 V_{SS} −0.3		V_{SS} +0.8 V_{SS} +0.4 V_{SS} +0.6	V V V
I_{in}	DC output leakage current (V_{in} = 0 to 5.25 V, V_{CC} = max)	Logic, Q, $\overline{RESET}$ E			2.5 100	µA µA
V_{OH}	DC output high voltage (I_{Load} = −205 µA, V_{CC} = min) (I_{Load} = −145 µA, V_{CC} = min) (I_{Load} = −100 µA, V_{CC} = min)	D0-D7 A0-A15, R/$\overline{W}$ BA, BS, LIC, AVMA, BUSY	V_{SS} +2.4 V_{SS} +2.4 V_{SS} +2.4			V V V
V_{OL}	DC output low voltage (I_{Load} = 2.0 mA, V_{CC} = min)				V_{SS} +0.5	V
P_{INT}	Internal power dissipation (measured at T_C = −55°C in steaby state operation)				1.1	W
C_{in}	Capacitance* (V_{in} = 0, T_A = 25°C, f = 1.0 MHz)	D0-D7, logic inputs, Q, $\overline{RESET}$ E		10 30	15 50	pF pF
C_{out}		A0-A15, R/$\overline{W}$, BA, BS, LIC, AVMA, BUSY		10	15	pF
f	Frequency of operation (E and Q inputs)	EF 6809 E EF 68A09 E EF 68B09 E	0.1 0.1 0.1		1.0 1.5 2.0	MHz MHz MHz
I_{TSI}	Hi-Z (off state) input current (V_{in} = 0.4 to 2.4 V, V_{CC} = max)	D0-D7 A0-A15, R/W		2.0	10 10	µA µA

* Capacitances are periodically tested rather than 100 % tested.

5.3 - Dynamic (switching) characteristics

The limits and values given in this section apply over the full case temperature range −55°C to +125°C and V_{CC} in the range 4.75 V to 5.25 V V_{IL} = 0.8 V and V_{IH} = 2 V (See also note 1).

Table 5 - Bus timing characteristics (See Notes 1, 2, 3 and Figure 11)

Symbol	Ident number	Characteristic	EF 6809 E		EF 68A09 E		EF 68B09 E		Unit
			Min	Max	Min	Max	Min	Max	
t_{cyc}	1	Cycle time	1.0	10	0.667	10	0.5	10	µs
PW_{EL}	2	Pulse width, E low	450	9500	295	9500	210	9500	ns
PW_{EH}	3	Pulse width, E high	450	9500	280	9500	220	9500	ns
t_r, t_f	4	Clock rise and fall time		25		25		20	ns
PW_{QH}	5	Pulse width, Q high	450	9500	280	9500	220	9500	ns
t_{EQ1}	7	Delay time, E to Q rise	200		130		100		ns
t_{EQ2}	7A	Delay time, Q high to E rise	200		130		100		ns
t_{EQ3}	7B	Delay time, E high to Q fall	200		130		100		ns
t_{EQ4}	7C	Delay time, Q high to E fall	200		130		100		ns
t_{AH}	9	Address hold time	20		20		20		ns
t_{AD}	11	Address delay time from S low (BA, BS, R/$\overline{W}$)		200		140		110	ns
t_{DSR}	17	Read data setup time	80		60		40		ns
t_{DHR}	18	Read data hold time*	10		10		10		ns
t_{DDQ}	20	Data delay time from Q		200		140		110	ns
t_{DHW}	21	Write data hold time	30		30		30		ns
t_{ACC}	29	Usable access time	695		440		330		ns
t_{CD}	30	Control delay time		300		250		200	ns
t_{PCS}		Interrupts, $\overline{HALT}$, $\overline{RESET}$, and TSC setup time (Figures 2, 3, 4, 5, 8 and 9)	200		140		110		ns
t_{TSV}		TSC drive to valid logic level (figure 9)		210		150		120	ns
t_{TSR}		TSC release MOS buffers to high impedance (figure 9)		200		140		110	ns
t_{TSD}		TSC hi-Z delay time (figure 9)		120		85		80	ns
t_{PCr} t_{PCf}		Processor control rise and fall time (figure 3)		100		100		100	ns

* Address and data hold times are periodically tested rather than 100% tested.

Note 1: Measurement points shown are 0.8 V and 2.0 V, unless otherwise specified.

Note 2: Hold time (⑨) for BA and BS is not specified.

Note 3: Usable access time is computed buy : 1-4-11 max − 17.

5.4 - Test conditions specific to the device

5.4.1 - Loading network

The applicable loading network shall be as defined in column «Test conditions» of Table 5, refering to the loading network number as shown in Figure 10 below.

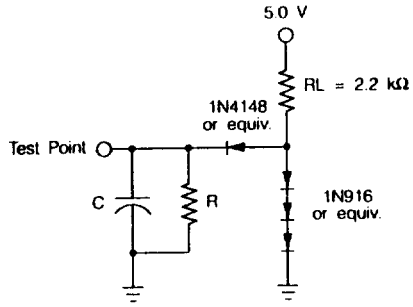

C = 30 pF for BA, BS, LIC, AVMA, BUSY
130 pF for D0-D7
90 pF for A0-A15, R / $\overline{W}$

R = 11.7 kΩ for D0-D7
16.5 kΩ for A0-A15, R / $\overline{W}$
24 kΩ for BA, BS, LIC, AVMA, BUSY

Figure 10 : Bus timing test load.

5.4.2 - Time definitions

The times specified in Table 5 as dynamic characteristics are defined in Figure 11 below, by a reference number given the column «method» of the tables together with the relevant figure number.

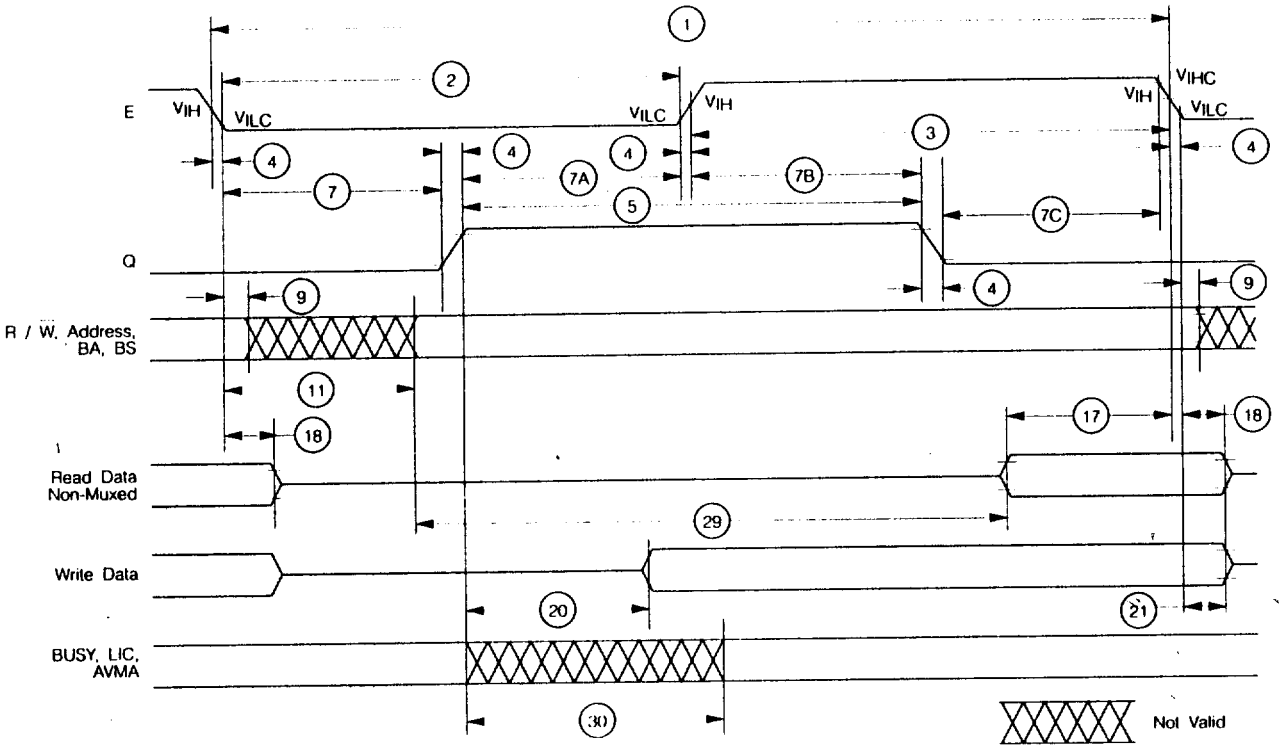

Figure 11 : Read/write data to memory or peripherals timing diagram.

5.5 - Additional information

Additional information shall not be for any inspection purposes.

5.5.1 - Power considerations (See § 3.4)

5.5.2 - Capacitance (Not for inspection purposes) see § 5.2 static characteristic table

6 - FUNCTIONNAL DESCRIPTION

6.1 - Programming model

As shown in Figure 12, the EF 6809E adds three registers to the set available in the EF 6800. The added registers include a direct page register, the user stack pointer, and a second index register.

ACCUMULATORS (A, B, D)

The A and B registers are general purpose accumulators which are used for arithmetic calculations and manipulation of data.

Certain instructions concatenate the A and B registers to form a single 16-bit accumulator. This is referred to as the D register, and is formed with the A register as the most significant byte.

DIRECT PAGE REGISTER (DP)

The direct page register of the EF 6809E serves to enhance the direct addressing mode. The content fo this register appears at the higher address outputs (A8-A15) during direct addressing instruction execution. This allows the direct mode to be used at any place in memory, under program control. To ensure EF 6800 compatibility, all bits of this register are cleared during processor reset.

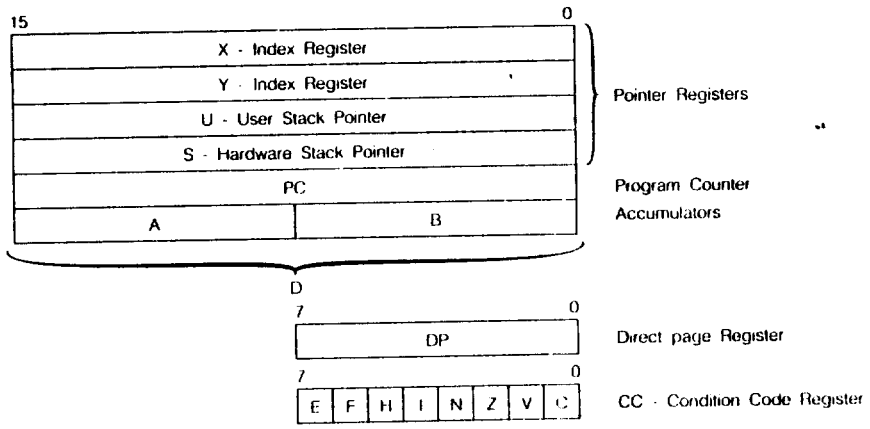

Figure 12 : Programming model of the microprocessing unit.

INDEX REGISTERS (X, Y)

The index registers are used in indexed mode of addressing. The 16-bit address in this register takes part in the calculation of effective addresses. This address may be used to point to data directly or may be modified by an optional constant or register offset. During some indexed modes, the contents of the index register are incremented or decremented to point to the next item of tabular type data. All four pointer registers (X, Y, U, S) may be used as index registers.

STACK POINTER (U, S)

The hardware stack pointer (S) is used automatically by the processor during subroutine calls and interrupts. The stack pointers (U) is controlled exclusively by the programmer. This allows arguments to be passed to and from subroutines with ease. The U register is frequenctly used as a stack marker. Both stack pointers have the same indexed mode addressing capabilities as the X and Y register, but also support Push and Pull instructions. This allows the EF 6809E to be used efficiently as a stack processor, greatly enhancing its ability to support higher level languages and modular programming.

Note : The stack pointers of the EF 6809E point to the top of the stack in contrast to the EF 6800 stack pointer, which pointed ot the next free location on stack.

PROGRAM COUNTER

The program counter is used by the processor to point to the address of the next instruction to be executed by the processor. Relative addressing is provided allowing the program counter to be used like an index register in some situations.

CONDITION CODE REGISTER

The condition code register defines the state of the processor at any given time. See Figure 13.

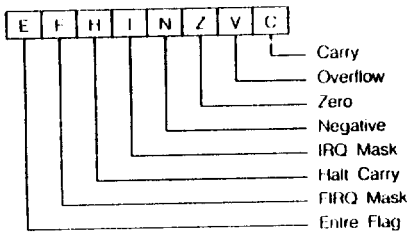

Figure 13 : Condition code register format.

CONDITION CODE REGISTER DESCRIPTION

BIT 0 (C)

Bit 0 is the carry flag, and is usually the carry from the binary ALU C is also used to represent a «borrow» from subtract like instructions (CMP, NEG, SUB, SBC) and is the complement of the carry from the binary ALU.

BIT 1 (V)

Bit 1 is the overflow flag, and is set to a one by an operation which causes a signed twos complement arithmetic overflow. This overflow is detected in an operation in which the carry from the MSB in the ALU does not match the carry from the MSB-1.

BIT 2 (Z)

Bit 2 is the zero flag, and is set to a one if the result of the previous operation was identically zero.

BIT 3 (N)

Bit 3 is the negative flag, which contains exactly the value of the MSB of the result of the preceding operation. Thus, a negative twos complement result will leave N set to a one.

BIT 4 (I)

Bit 4 is the $\overline{IRQ}$ mask bit. The processor will not recognize interrupts from the $\overline{IRQ}$ line if this bit is set to a one. $\overline{NMI}$, $\overline{FIRQ}$, $\overline{IRQ}$, $\overline{RESET}$, and SWI all set I to a one, SWI2 and SWI3 do not affect I.

BIT 5 (H)

Bit 5 is the half-carry bit, and is used to indicate a carry from bit 3 in the ALU as a result of an 8-bit addition only (ADC or ADD). This bit is used by the DAA instruction to perform a BCD decimal add adjust operation. The state of this flag is undefined in all subtract-like instruction.

BIT 6 (F)

Bit 6 is the $\overline{FIRQ}$ mask bit. The processor will not recognize interrupts from the $\overline{FIRQ}$ line if this bit is a one. $\overline{NMI}$, $\overline{FIRQ}$, SWI and $\overline{RESET}$ all set F to a one. $\overline{IRQ}$, SWI2, and SWI3 do not affect F.

BIT 7 (E)

Bit 7 is the entire flag, and when set to a one indicates that the complete machine state (all the registers) was stacked, as opposed to the subset state (PC and CC). The E bit of the stacked CC is used on a return from interrupt (RTI) to determine the extent of the unstacking. Therefore, the current E left in the condition code register represents past action.

6.2 - MPU operation

During normal operation, the MPU fetches an instruction from memory and then executes the requested function.

This sequence begins after $\overline{RESET}$ and is repeated indefinitely unless altered by a special instruction or hardware occurrence. Software instructions that alter normal MPU operation are : SWI, SWI2, SWI3, CWAI, RTI, and SYNC. An interrupt or $\overline{HALT}$ input can also alter the normal execution of instructions. Figure 14 is the flowchart for the EF 6809E.

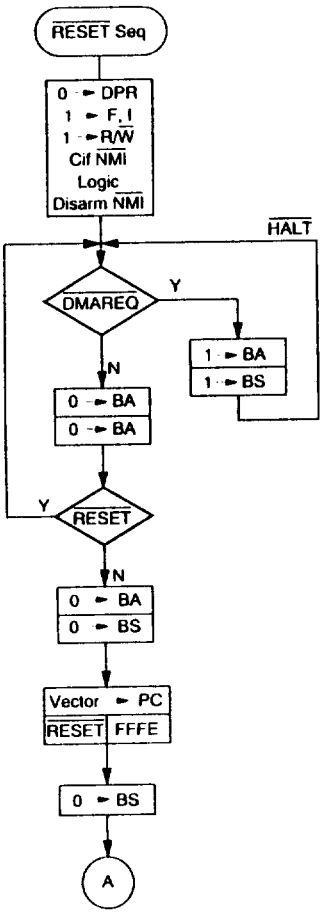

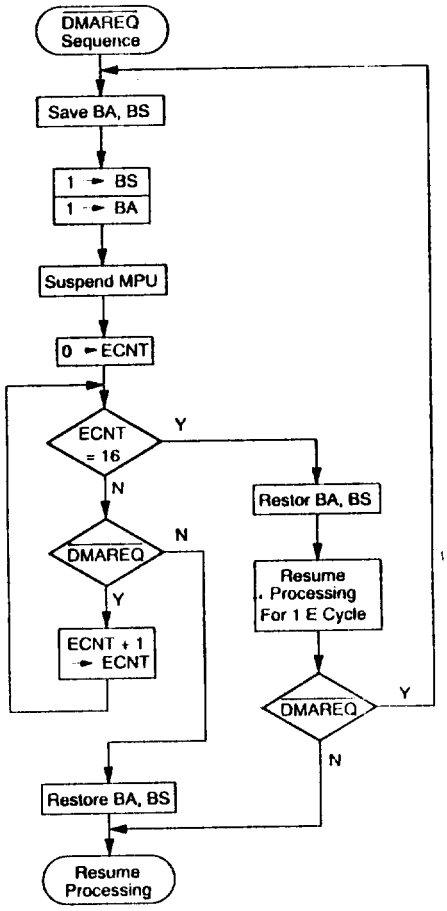

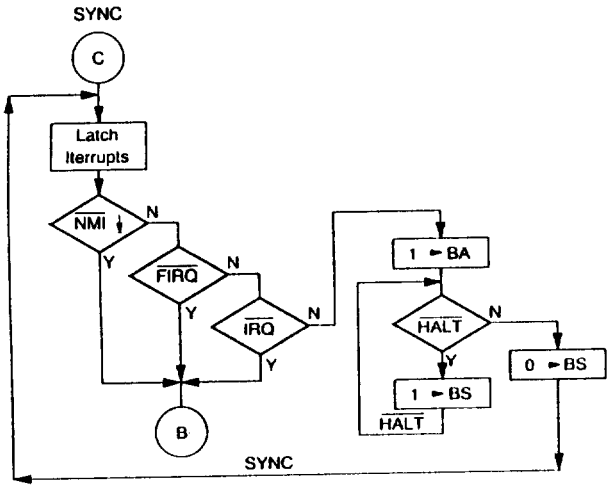

Bus State	BA	BS
Running	0	0
Interrupt or Reset Acknowledge	0	1
Sync Acknowledge	1	0
Halt or Bus Grant Acknowledge	1	1

Figure 14 : Flowchart for EF 6809E instructions.

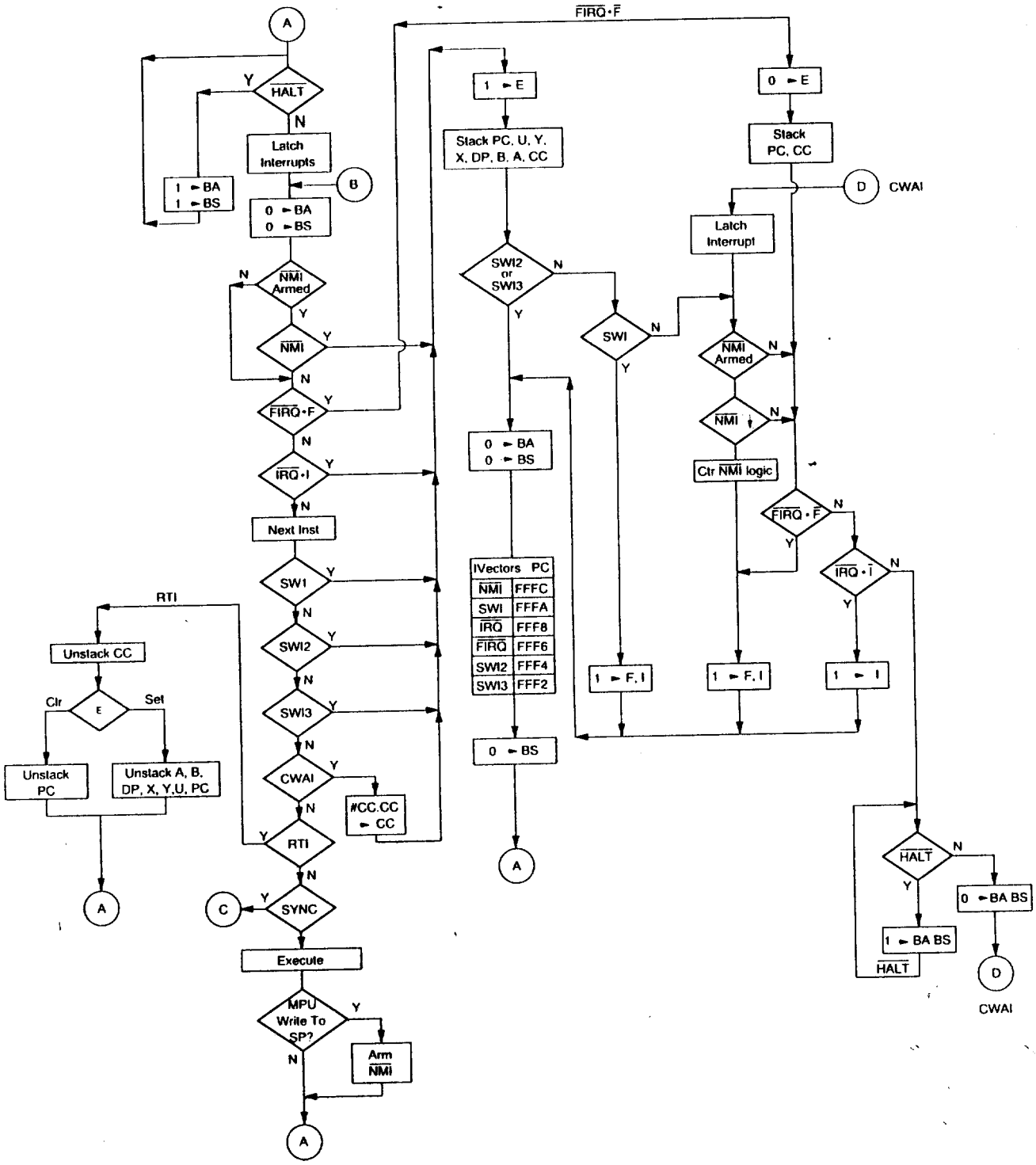

Note 1 : Asserting RESET will result in entering the reset sequence from any point in the flowchart.
Note 2 : BUSY is high during first vector fetch cycle.

Figure 14 : Flowchart for EF 6809E instructions.

6.3 - Addressing modes

The basic instructions of any computer are greatly enhanced by the presence of powerful addressing modes. The EF 6809E has the most complete set of addressing modes available on any microcomputer today. For example, the EF 6809E has 59 basic instructions; however, it recognizes 1464 different variations of instructions and addressing modes. The addressing modes support modern programming techniques. The following addressing modes are available on the EF 6809E:

Inherent (includes accumulator)
Immediate
Extended
  Extended direct
Direct
Register
Indexed
  Zero-Offset
  Constant Offset
  Accumulator Offset
  Auto Increment/Decrement
  Indexed Indirect
Relative
  Short/Long Relative Branching
  Program Counter Relative Addressing.

INHERENT (INCLUDES ACCUMULATOR)

In this addressing mode, the opcode of the instruction contains all the address information necessary. Examples of inherent addressing are: ABX, DAA, SWI, ASRA, and CLRB.

IMMEDIATE ADDRESSING

In immediate addressing, the effective address of the data is the location immediately following the opcode (i.e., the data to be used in the instruction immediately following the opcode of the instruction). The EF 6809E uses both 8- and 16-bit immediate values depending on the size of argument specified by the opcode. Examples of instructions with immediate addressing are:

```
LDA # $20
LDX # $F000
LDY # CAT
```

Note: # signifies immediate addressing; $ signifies hexadecimal value to the EF 6809E assembler.

EXTENDED ADDRESSING

In extended addressing, the contents of the two bytes immediately following the opcode fully specify the 16-bit effective address used by the instruction. Note that the address generated by an extended instruction defines an absolute address and is not position idenpendent. Examples of extended addressing include:

```
LDA   CAT
STX   MOUSE
LDD   $2000
```

EXTENDED INDIRECT

As a the special case of indexed addresing (discussed below), one level of indirection may be added to extended addressing. In extended indirect, the two bytes following the postbyte of an indexed instruction contain the address of the data.

```
LDA   [CAT]
LDX   [$FFFE]
STU   [DOG]
```

DIRECT ADDRESSING

Direct addressing is similar to extended addressing except that only one byte of address follows the opcode. This byte specifies the lower eight bits of the address to be used. The upper eight bits of the address are supplied by the direct page register. Since only one byte of address is required in direct addressing, this mode requires less memory and executes faster than extended addressing. Of course, only 256 locations (one page) can be accesed without redefining the contents of the DP register. Since the DP register is set to $00 on reset, direct addressing on the EF 6809E is upward comptible with direct addressing on the EF 6800. Indirection is not allowed in direct addressing. Some examples of direct addressing are:

```
LDA   where DP = $00
LDB   where DP = $10
LDD   < CAT
```

Note: < is an assembler directive which forces direct addressing.

REGISTER ADDRESSING

Some opcodes are followed by a byte that defines a register or set of registers to be used by the instruction. This is called a postbyte. Some examples of register addresing are:

```
TFR   X, Y,       Transfers X into Y
EXG   A, B        Exchanges A with B
PSHS  A, B, X, Y  Push Y, X, B and A onto S stack
PULU  X, Y, D     Pull D, X, and Y from U stack
```

INDEXED ADDRESSING

In all indexed addressing, one of the pointer registers (X, Y, U, S, and sometimes PC) is used in a calculation of the effective address of the operand to be used by the instruction. Five basic types of indexing are available and are discussed below. The postbyte of an indexed instruction specifies the basic type and variation of the addressing mode as well as the pointer register to be used. Figure 15 lists the legal formats for the postbyte. Table 6 gives the assembler form and the number of cycles and bytes added to the basic values for indexed addressing for each variation.

Postbyte Register Bit								Indexed addressing mode
7	6	5	4	3	2	1	0	
0	R	R	d	d	d	d	d	EA = ,R + 5 bit offset
1	R	R	0	0	0	0	0	,R +
1	R	R	i	0	0	0	1	,R + +
1	R	R	0	0	0	1	0	,– R
1	R	R	i	0	0	1	1	,– – R
1	R	R	i	0	1	0	0	EA = ,R + 0 offset
1	R	R	i	0	1	0	1	EA = ,R + ACCB offset
1	R	R	i	0	1	1	0	EA = ,R + ACCA offset
1	R	R	i	1	0	0	0	EA = ,R + 8 bit offset
1	R	R	i	1	0	0	1	EA = ,R + 16 bit offset
1	R	R	i	1	0	1	1	EA = ,R + D offset
1	x	x	i	1	1	0	0	EA = ,PC + 8 bit offset
1	x	x	i	1	1	0	1	EA = ,PC + 16 bit offset
1	R	R	i	1	1	1	1	EA = [,Address]

Addressing Mode Field

Indirect Field
(Sign bit when b_7 = 0)

Register Field : RR
00 = X
01 = Y
10 = U
11 = S

x = Don't Care
d = Offset Bit
i = 0 = Not Indirect
1 = Indirect

Figure 15 : Indexed addressing postbyte register bit assignments.

ZERO-OFFSET INDEXED

In this mode, the selected pointer register contains the effective address of the data to be used by the instruction. This is the fastest indexing mode.

Examples are :

```
LDD   O, X
LDA   S
```

CONSTANT OFFSET INDEXED

In this mode, a twos complement offset and the contents of one of the pointer registers are added to form the effective address of the operand. The pointer register's initial content is unchanged by the addition.

Three sizes of offset are available :

5 bit (– 16 to + 15)
8 bit (– 128 to + 127)
16 bit (– 32768 to + 32767)

The twos complement 5-bit offset is included in the postbyte and, therefore, is most efficient in use of bytes and cycles. The twos complement 8-bit offset is contained in a single byte following the postbyte. The twos complement 16-bit offset is in the two bytes following the postbyte. In most cases the programmer need not be concerned with the size of this offset since the assembler will select the optimal size automatically.

Examples of constant-offset indexing are :

```
LDA   23, X
LDX   – 2, S
LDY   300, X
LDU   CAT, Y
```

Table 6 - Indexed addressing mode

Type	Forms	Non indirect				Indirect			
		Assembler form	Postbyte opcode	+ ~	+ #	Assembler form	Postbyte opcode	+ ~	+ #
Constant offset from R	No offset	,R	1RR00100	0	0	[,R]	1RR10100	3	0
(2s complement offsets)	5-bit offset	n, R	0RRnnnnn	1	0	defaults to 8-bit			
	8-bit offset	n, R	1RR01000	1	1	[n, R]	1RR11000	4	1
	16-bit offset	n, R	1RR01001	4	2	[n, R]	1RR11001	7	2
Accumulator offset from R (2s complement offsets)	A register offset	A, R	1RR00110	1	0	[A, R]	1RR10110	4	0
	B register offset	B, R	1RR00101	1	0	[B, R]	1RR10101	4	0
	D register offset	D, R	1RR01011	4	0	[D, R]	1RR11011	7	0
Auto increment/decrement R	Increment by 1	,R+	1RR00000	2	0	not allowed			
	Increment by 2	,R++	1RR00001	3	0	[,R++]	1RR10001	6	0
	Decrement by 1	,-R	1RR00010	2	0	not allowed			
	Decrement by 2	,--R	1RR00011	3	0	[,--R]	1RR10011	6	0
Constant offset from PC (2s complemet ofsets)	8-bit offset	n, PCR	1xx01100	1	1	[n, PCR]	1xx11100	4	1
	16-bit offset	n, PCR	1xx01101	5	2	[n, PCR]	1xx11101	8	2
Extended indirect	16-bit address					[n]	10011111	5	2

R = X, Y, U or S
x = don't care

RR:
00 = X
01 = Y
10 = U
11 = S

$^{+}_{-}$ and $^{+}_{\#}$ indicate the number of additionnal cycles and bytes for the particular variation.

ACCUMULATOR-OFFSET INDEXED

This mode is similar to constant offset indexed except that the twos complement value in one of the accumulators (A, B, or D) and the contents of one of the pointer registers are added to form the effective address of the operand. The contents of both the accumulator and the pointer register are unchanged by the addition. The postbyte specifies which accumulator to use as an offset and no additional bytes are required. The advantage of an accumulator offset is that the value of the offset can be calculated by a program at run-time.

Some examples are :

```
LDA   B, Y
LDX   D, Y
LEAX  B, X
```

AUTO INCREMENT/DRECREMENT INDEXED

In the auto increment addressing mode, the pointer register contains the address of the operand. Then, after the pointer register is used it is incremented by one or two. This addressing mode is useful in stepping through tables, moving data, or creating software stacks. In auto decrement, the pointer register is drecremented prior to use as the address of the data. The use of auto decrement is similar to that of auto increment, but the tables, etc, are scanned from the high to low addresses. The size of the increment/decrement can be either one or two to allow for tables of either 8- or 16-bit data to be accessed and is selectable by the programmer. The pre-decrement, post-increment nature of these modes allows them to be used to create additional software stacks that behave identically to the U and S stacks.

Some examples, of the auto increment/decrement addressing modes are :

```
LDA   ,X +
STD   ,Y + +
LDB   ,- Y
LDX   ,- - S
```

Care should be taken in performing operations on 16-bit pointer registers (X, Y, U, S) where the same register is used to calculate the effective address.

Consider the following instruction : STX 0, X + + (X initialized to 0)

The desired result is to store zero in locations $0000 and $0001 then increment X to point to $0002. In reality, the following occurs :

0 → temp	calculate the EA ; temp is a holding register
X + 2 → X	perform auto increment
X → (temp)	do store operation

INDEXED INDIRECT

All of the indexing modes, with the exception of auto increment/decrement by one or a ±5-bit offset, may have an additional level of indirection specified. In indirect addressing, the effective address is contained at the location specified by the contents of the index register plus any offset. In the example below, the A accumulator is loaded indirectly using an effective address calculated from the index register and an offset.

```
        Before Execution
        A = XX (don't care)
        X = $F000
$0100   LDA [$10, X]   EA is now $F010
$F010   $F1            $F150 is now the new EA
$F011   $50
$F150   $AA
        After Execution
        A = $AA (actual data loaded)
        X = $F000
```

All modes of indexed indirect are included except those which are meaningless (e.g., auto increment/decrement by 1 indirect). Some examples of indexed indirect are :

```
LDA   [,X]
LDD   [10, S]
LDA   [B, Y]
LDD   [,X + +]
```

RELATIVE ADDRESSING

The byte(s) following the branch opcode is (are) treated as a signed offset which may be added to the program counter. If the branch condition is true, then the calculated address (PC + signed offset) is loaded into the program counter. Program execution continues at the new location as indicated by the PC ; short (one byte offset) and long (two bytes offset) relative addressing modes are available. All of memory can be reached in long relative addressing as an effective address interpreted modulo 2^{16}. Some examples of relative addressing are :

```
        BEQ     CAT     (short)
        BGT     DOG     (short)
CAT     LBEQ    RAT     (long)
DOG     LBGT    RABBIT  (long)
        •
        •
        •
RAT     NOP
RABBIT  NOP
```

PROGRAM COUNTER RELATIVE

The PC can be used as the pointer register with 8- or 16-bit signed offsets. As in relative addressing, the offset is added to the current PC to create the effective address. The effective address is then used as the address of the operand or data. Program counter relative addressing is used for writing position independent programs. Tables related to a particular routine will maintain the same relationship after the routine is moved, if referenced relative to the program counter. Examples are :

```
LDA   CAT, PCR
LEAX  TABLE, PCR
```

Since program counter relative is a type of indexing, an additional level of indirection is available.

```
LDA   [CAT, PCR]
LDU   [DOG, PCR]
```

6.4 - Instruction set

The instruction set of the EF 6809E is similar to that of the EF 6800 and is upward compatible at the source code level. The number of opcodes has been reduced from 72 to 59, but because of the expanded architecture and additional addressing modes, the number of available opcodes (with different addressing modes) has risen from 197 to 1464.

Some of the new instructions are described in detail below.

PSHU/PSHS

The push instructions have the capability of pushing onto either the hardware stack (S) or user stack (U) any single register or set of registers with a single instruction

PULU/PULS

The pull instructions have the same capability of the push instruction, in reverse order. The byte immediately following the push or pull opcode determines which register or registers are to be pushed or pulled. The actual push/pull sequence is fixed ; each bit defines a unique register to push or pull, as shown below.

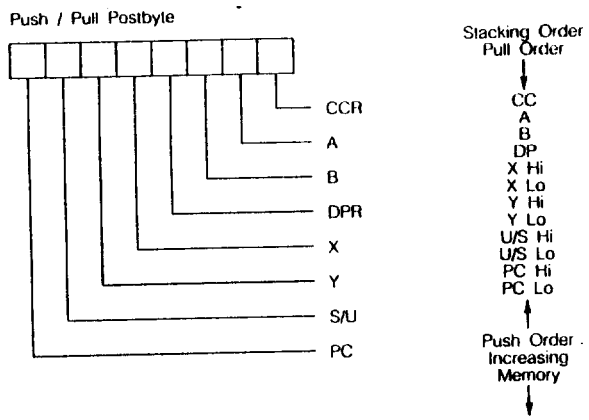

TFR/EXG

Within the EF 6809E, any register may be transferred to or exchanged with another of like size ; i.e., 8-bit to 8-bit or 16-bit to 16 bit. Bits 4-7 of postbyte define the source register, while bits 0-3 represent the destination register. These are denoted as follows :

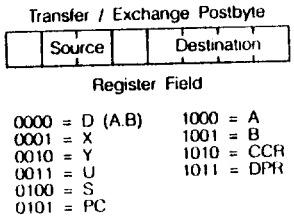

Note : All other combinations are undefined and INVALID.

LEAX/LEAY/LEAU/LEAS

The LEA (load effective address) works by calculating the effective address used in an indexed instruction and stores that address value, rather than the data at that address, in a pointer register. This makes all the features of the internal addressing hardware available to the programmer. Some of the implications of this instruction are illustrated in Table 7.

Table 7 - LEA examples

Instruction		Operation		Comment
LEAX	10, X	X + 10	X	Adds 5-bit constant 10 to X
LEAX	500, X	X + 500	X	Adds 16-bit constant 500 to X
LEAY	A, Y	Y + A	Y	Adds 8-bit A accumulator to Y
LEAY	D, Y	Y + D	Y	Adds 16-bit D accumulator to Y
LEAU	– 10, U	U – 10	U	Substracts 10 from U
LEAS	– 10, S	S – 10	S	Used to reserve area on stack
LEAS	10, S	S + 10	S	Used to clean up'stack
LEAX	5, S	S + 10	X	Transfers as well as adds

The LEA instruction also allows the user to access data and tables in a position independent manner. For example :

```
        LEAX    MSG1, PCR
        LBSR    PDATA (Print message routine)
        •
        •
MSG1    FCC     «MESSAGE»
```

This sample program prints : «MESSAGE». By writing MSG1, PCR, the assembler computes the distance between the present address and MSG1. This result is placed as a constant into the LEAX instruction which will be indexed from the PC value at the time of execution. No matter where the code is located when it is executed, the computed offset from the PC will put the absolute address of MSG1 into the X pointer register. This code is totally position independent.

The LEA instructions are very powerful and use an internal holding register (temp). Care must be exercised when using the LEA instructions with the auto increment and auto decrement addressing modes due to the sequence of internal operations. The LEA internal sequence is outlined as follows :

LEAa ,b+ (any of the 16-bit pointer registers X, Y, U, or S may be substituted for a and b)
1. b → temp (calculate the EA)
2. b + 1 → b (modify b, postincrement)
3. temp → a (load a)

LEAa , – b
1. b – 1 → temp (calculate EA with predecrement)
2. b – 1 → b (modify b, predecrement)
3. temp → a (load a)

Auto increment-by-two and auto decrement-by-two instructions work similary. Note that LEAX ,X+ does not change X ; however LEAX, – X does decrement X.LEAX 1,X should be used to increment X by one.

MUL

Multiplies the unsigned binary numbers in the A and B accumulator and places the unsigned result into the 16-bit D accumlator. The unsigned multiply also allows multiple-precision multiplications.

LONG AND SHORT RELATIVE BRANCHES

The EF 6809E has the capability of program counter relative branching throughout the entire memory map. In this mode, if the branch is to be taken, the 8- or 16-bit signed offset is added to the value of the program counter to be used as the effective address. This allows the program to branch anywhere in the 64K memory map. Position-independent code can be easily generated through the use of relative branching. Both short (8-bit) and long (16-bit) branches are available.

SYNC

After encountering a sync instruction, the MPU enters a sync state, stops processing instructions, and waits for an interrupt. If the pending interrupt is non-maskable (NMI) or maskable ($\overline{FIRQ}$, $\overline{IRQ}$) with its mask bit (F or I) clear, the processor will clear the sync state and perform the normal interrupt stacking and service routine. Since $\overline{FIRQ}$ and $\overline{IRQ}$ are not edge-triggered, a low level with a minimum duration of three bus cycles is required to assure that the interrupt will be taken. If the pending interrupt is maskable ($\overline{FIRQ}$, $\overline{IRQ}$) with its mask bit (F or I) set, the processor will clear the sync state and continue processing by executing the next in-line instruction. Figure 16 depicts sync timing.

SOFTWARE INTERRUPTS

A software interrupt is an instruction which will cause an interrupt and its associated vector fetch. These software interrupts are useful in operating system calls, software debugging, trace operations, memory mapping, and software developement systems. Three levels of SWI are available on the EF 6809E and are prioritized in the following order : SWI, SWI2, SWI3.

16-BIT OPERATION

The EF 6809E, has the capability of processing 16-bit data. These instructions include loads, stores, compares, adds, subtracts, transfers, exchanges, pushes, and pulls.

CYCLE-BY-CYCLE OPERATION

The address bus cycle-by-cycle performance chart (Figure 17) illustrates the memory-access sequence corresponding to each possible instruction and addressing mode in the EF 6809E. Each instruction begins with an opcode fetch. While that opcode is being internally decoded, the next program byte is always fetched. (Most instructions will use the next byte, so this technique considerably speeds through-put). Next, the operation of each opcode will follow the flowchart. $\overline{VMA}$ is an indication of $FFFF_{16}$ on the address bus, R/$\overline{W}$ = 1 and BS = 0. The following examples illustrate the use of the chart.

Example 1 : LBSR (Branch Taken). Before Execution SP = F000

```
                    •
                    •
                    •
$ 8000              LBSR    CAT
                    •
                    •
                    •
$ A000    CAT       •
```

Cycle-by-cycle flow

Cycle #	Address	Data	R/$\overline{W}$	Description
1	8000	17	1	Opcode fetch
2	8001	20	1	Offset high byte
3	8002	00	1	Offset low byte
4	FFFF	*	1	$\overline{VMA}$ cycle
5	FFFF	*	1	$\overline{VMA}$ cycle
6	A000	*	1	Computed branch address
7	FFFF	*	1	$\overline{VMA}$ cycle
8	EFFF	80	0	Stack high order byte of return address
9	EFFE	03	0	Stack low order byte of return address

Example 2 : DEC (Extended) $ 8000 DEC $ A000

•
•
•

$ A000 $ 80

Cycle-by-cycle flow

Cycle #	Address	Data	R/$\overline{W}$	Description
1	8000	7A	1	Opcode fetch
2	8001	A0	1	Operand address, high byte
3	8002	00	1	Operand address, low byte
4	FFFF	*	1	$\overline{VMA}$ cycle
5	A000	80	1	Read the data
6	FFFF	*	1	$\overline{VMA}$ cycle
7	A000	7F	0	Store the decremented data

* The data bus has the data at that particular address.

INSTRUCTION SET TABLES

The instructions of the EF 6809E have been broken down into five different categories. They are as follows :

8-bit operation (Table 8)
16-bit operation (Table 9)
Index register/stack pointer instructions (Table 10)
Relative branches (long or short) (Table 11)
Miscellaneous instructions (Table 12)

Hexadecimal value for the instructions are given in Table 13.

PROGRAMMING AID

Figure 18 contains a compilation of data that will assist in programming the EF 6809E.

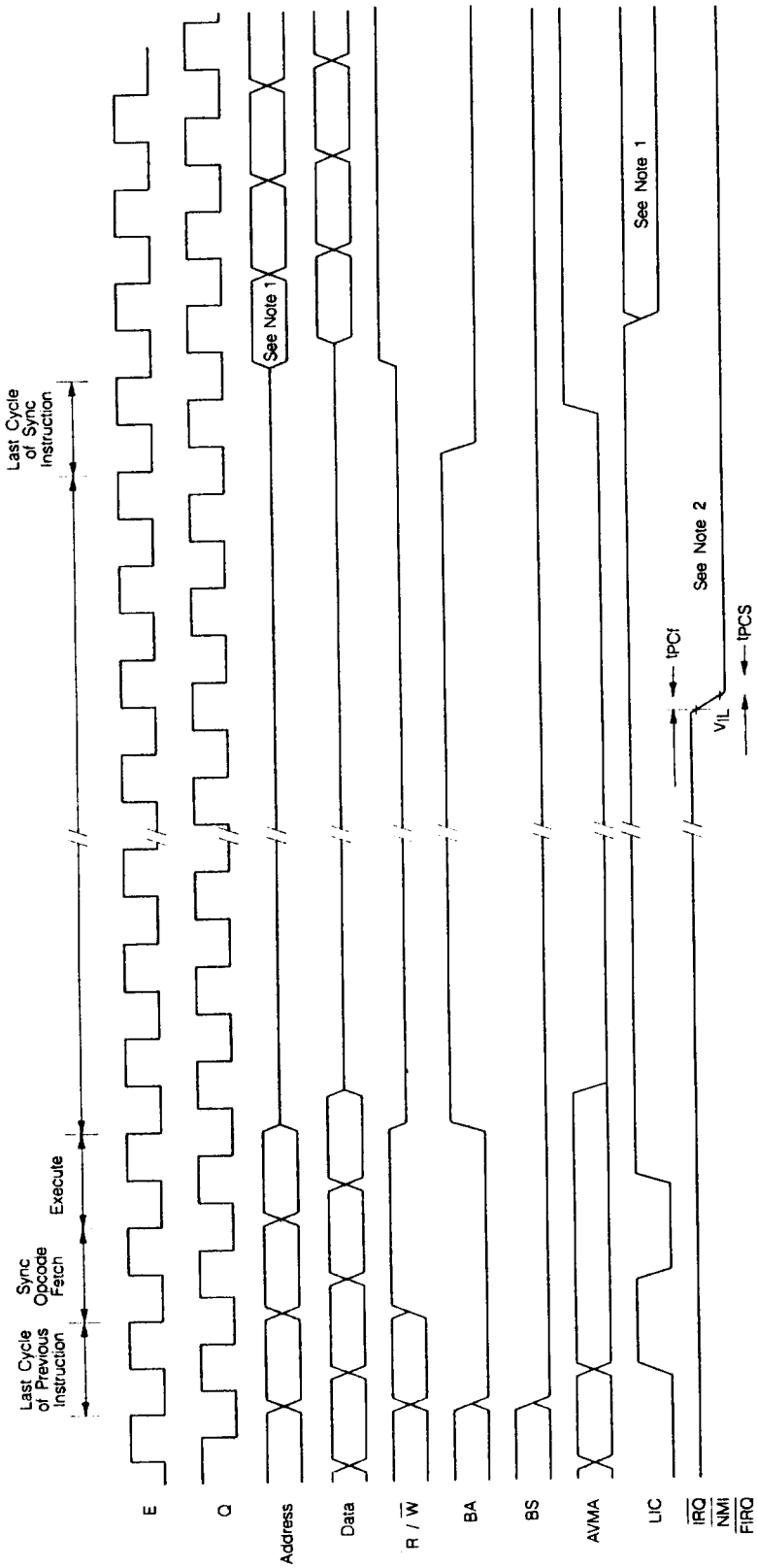

Note 1 : If the associated mask bit is set when the interrupt is requested, LIC will go low and this cycle will be an instruction fetch from address location PC + 1. However, if the interrupt is accepted (NMI or an unmasked FIRQ or IRQ) LIC will remain high and interrupt processing with start with this cycle as m on Figures 4 and 5 (Interrupt timing).

Note 2 : If mask bits are clear, IRQ and FIRQ must be held low for three cycles to guarantee that interrupt will be taken, although only one cycle is necessary to bring the processor out of SYNC.

Note 3 : Timing measurements are referenced to and from a low voltage of 0.8 volts and a high voltage of 2.0 volts, unless otherwise noted.

Figure 16 : SYNC timing.

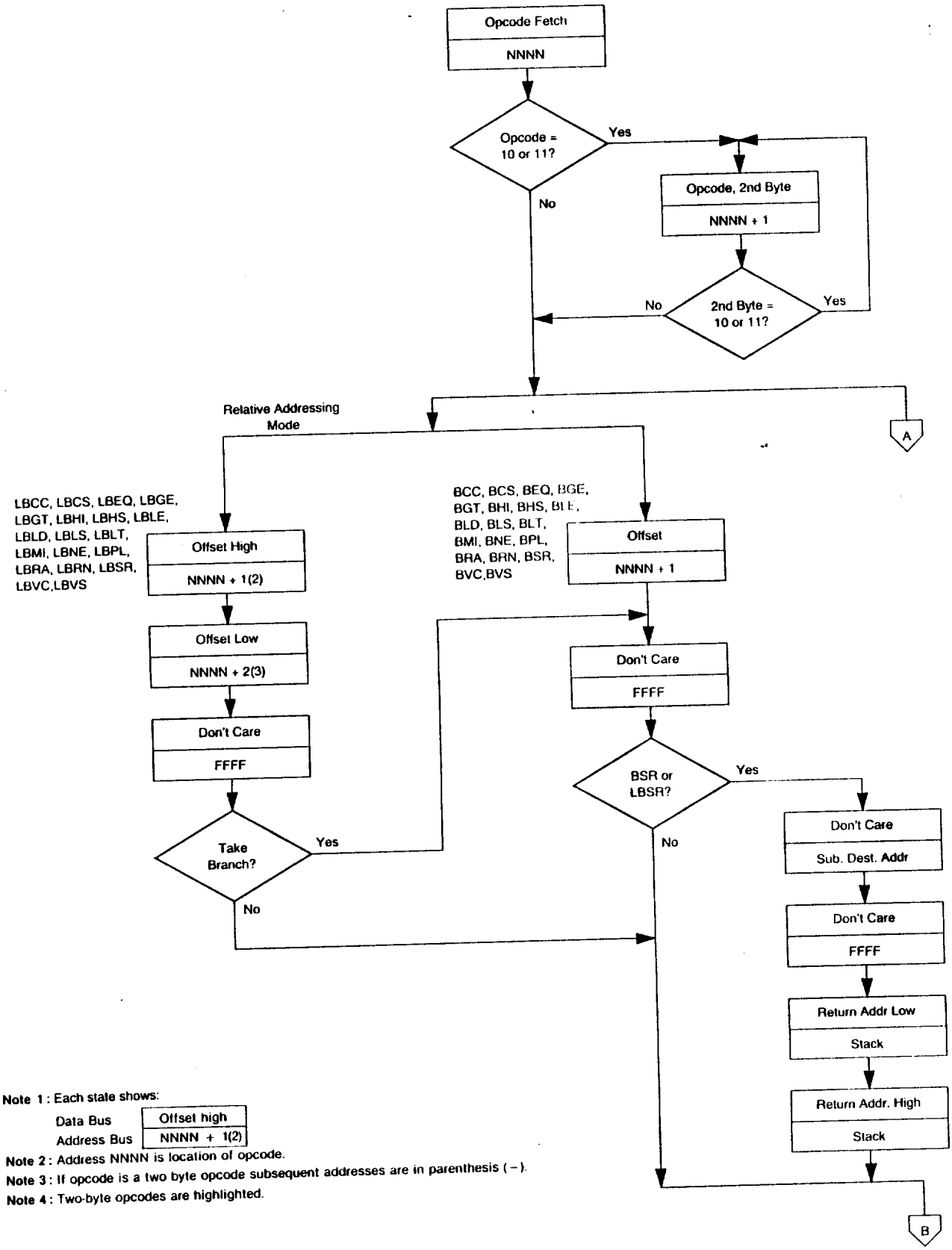

Note 1 : Each state shows:

Data Bus	Offset high
Address Bus	NNNN + 1(2)

Note 2 : Address NNNN is location of opcode.

Note 3 : If opcode is a two byte opcode subsequent addresses are in parenthesis (–).

Note 4 : Two-byte opcodes are highlighted.

Figure 17 : Cycle-by-cycle performance (Sheet 1 of 9).

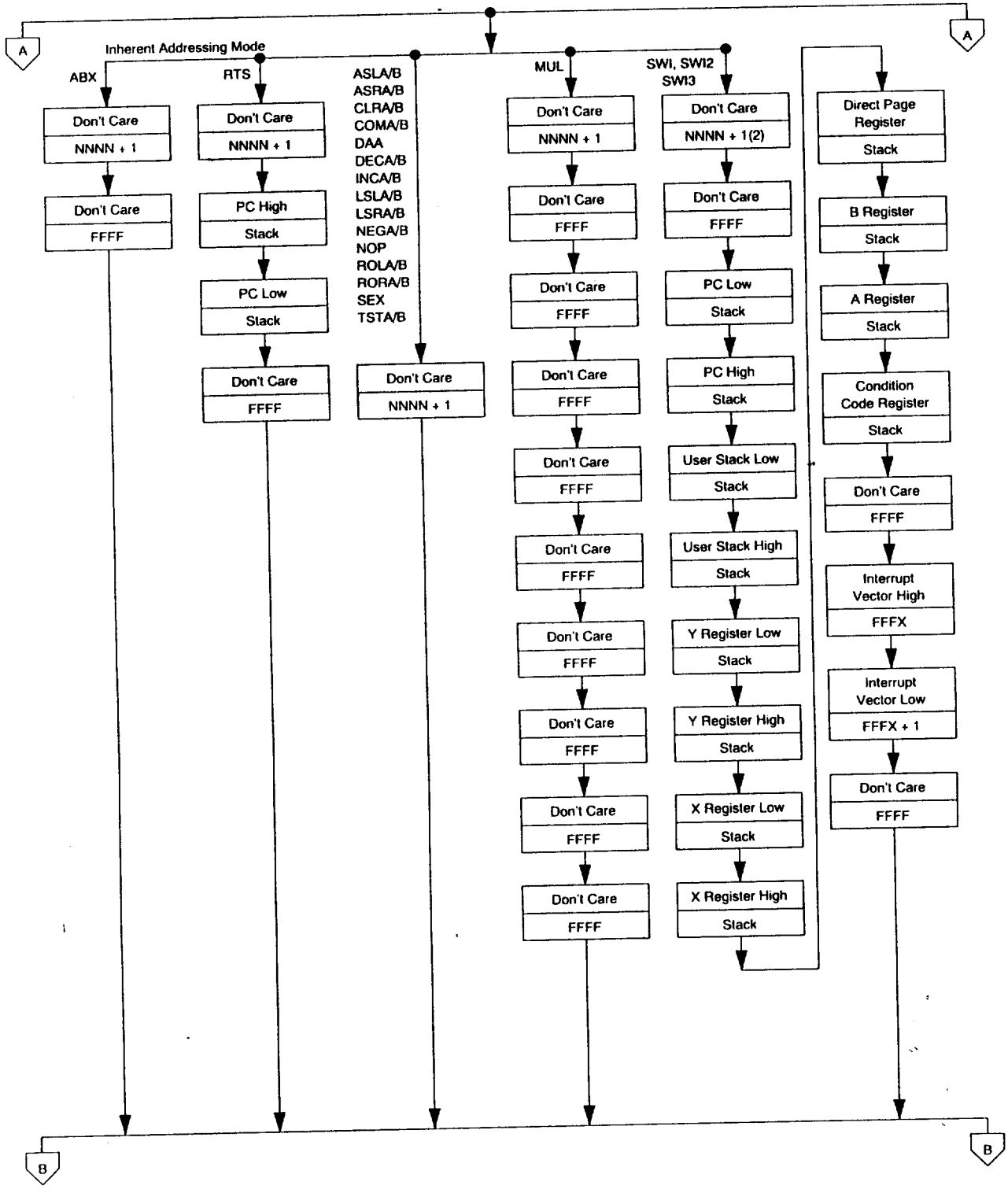

Figure 17 : Cycle-by-cycle performance (Sheet 2 of 9).

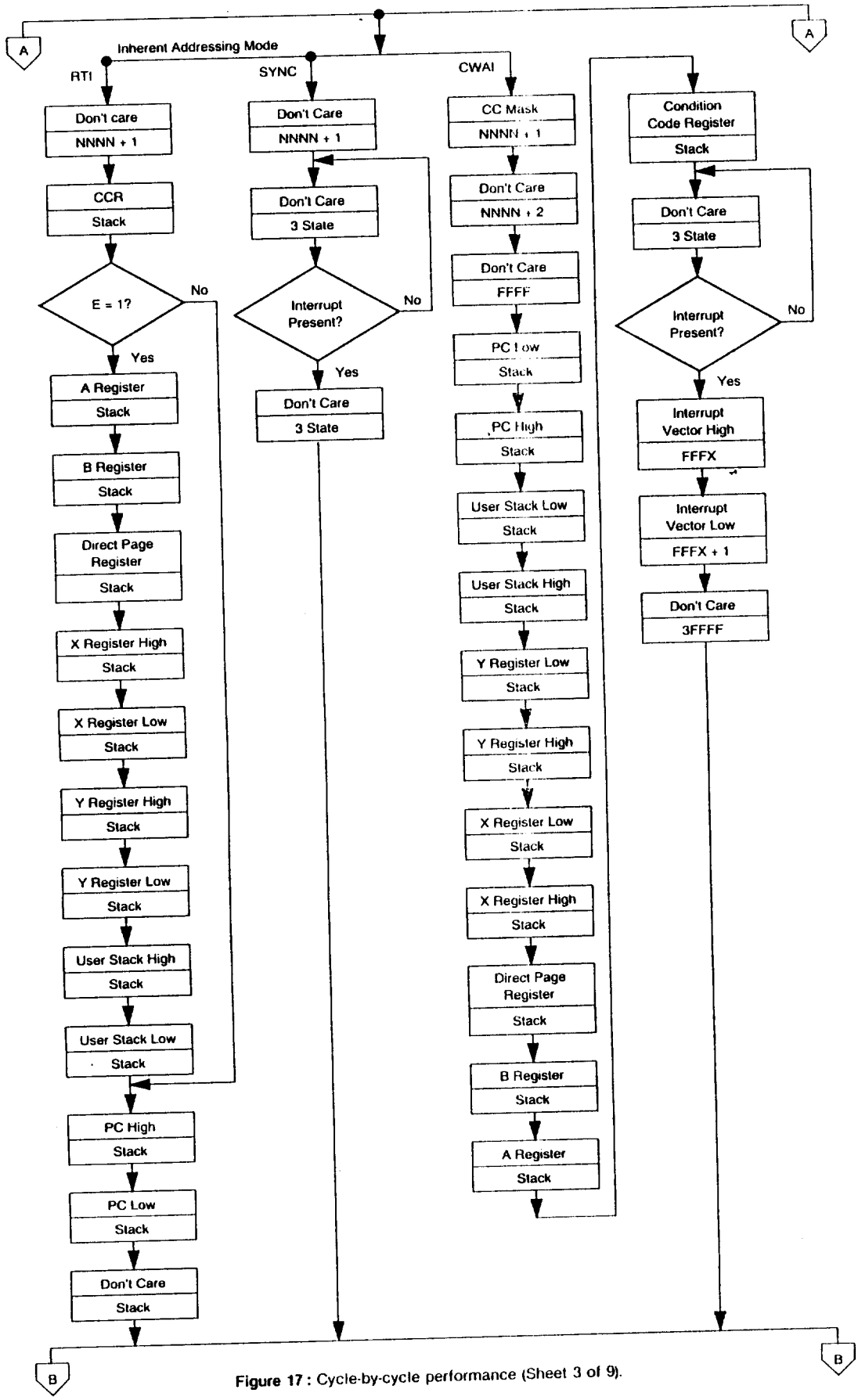

Figure 17 : Cycle-by-cycle performance (Sheet 3 of 9).

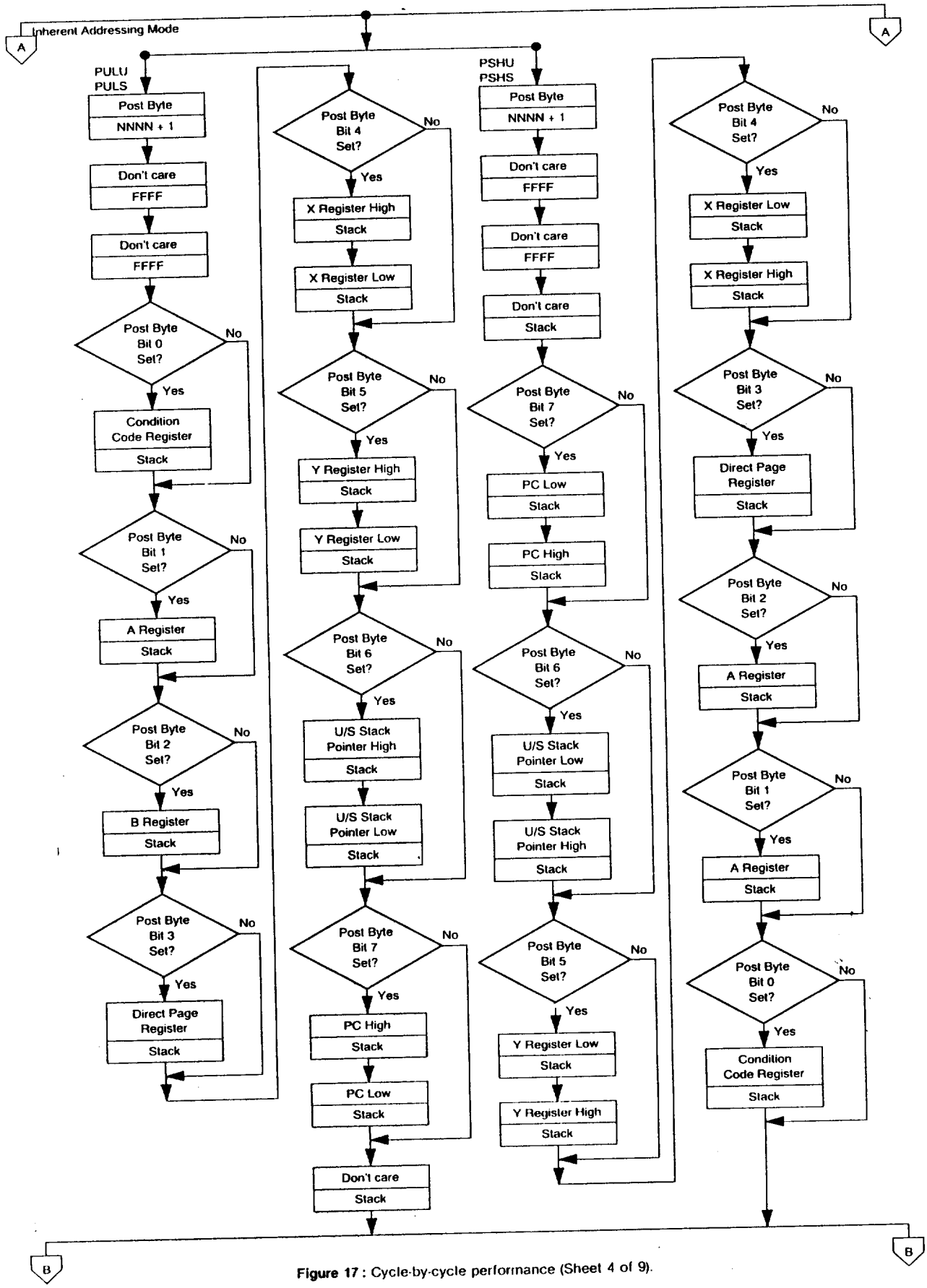

Figure 17 : Cycle-by-cycle performance (Sheet 4 of 9).

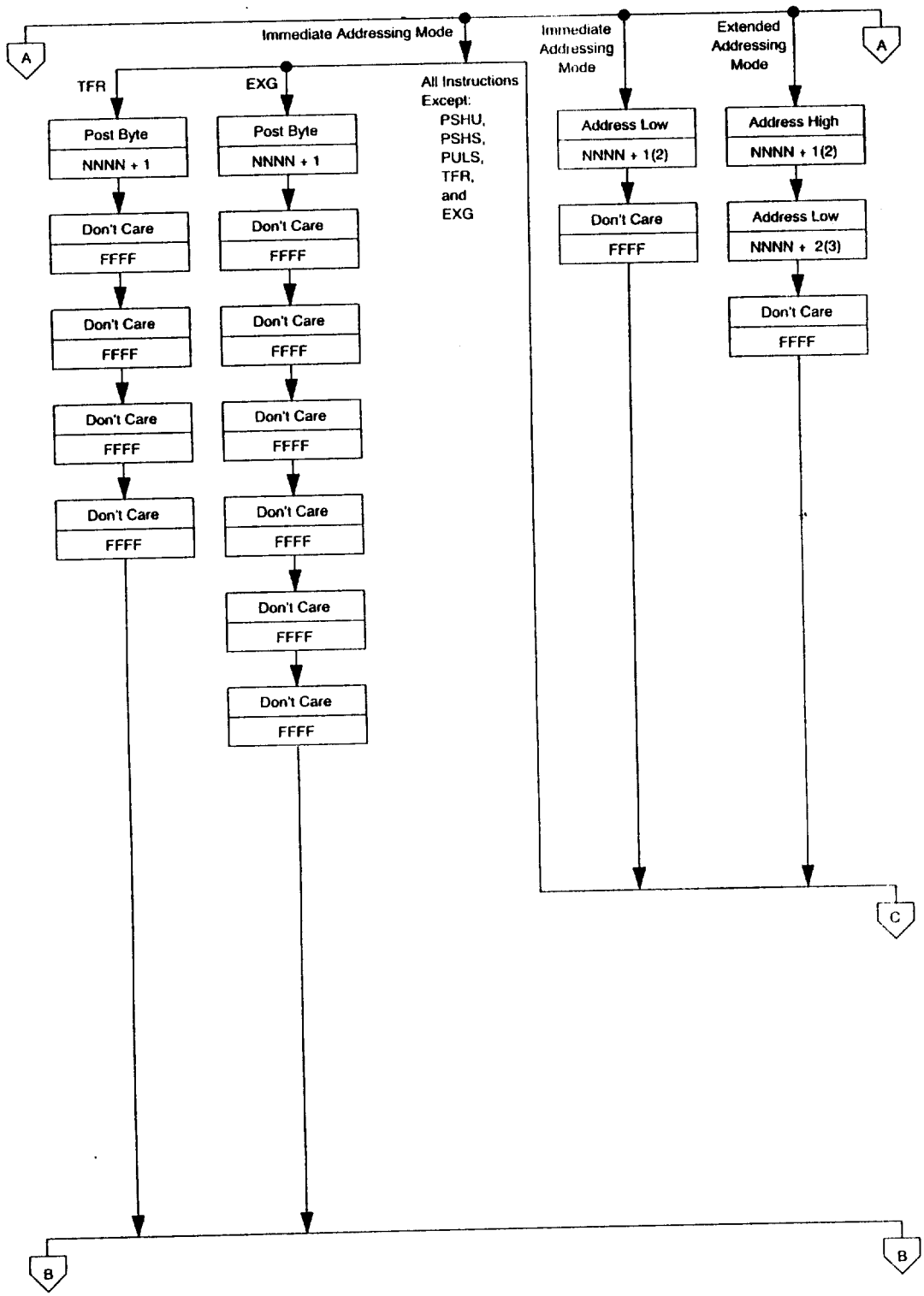

Figure 17 : Cycle-by-cycle performance (Sheet 5 of 9).

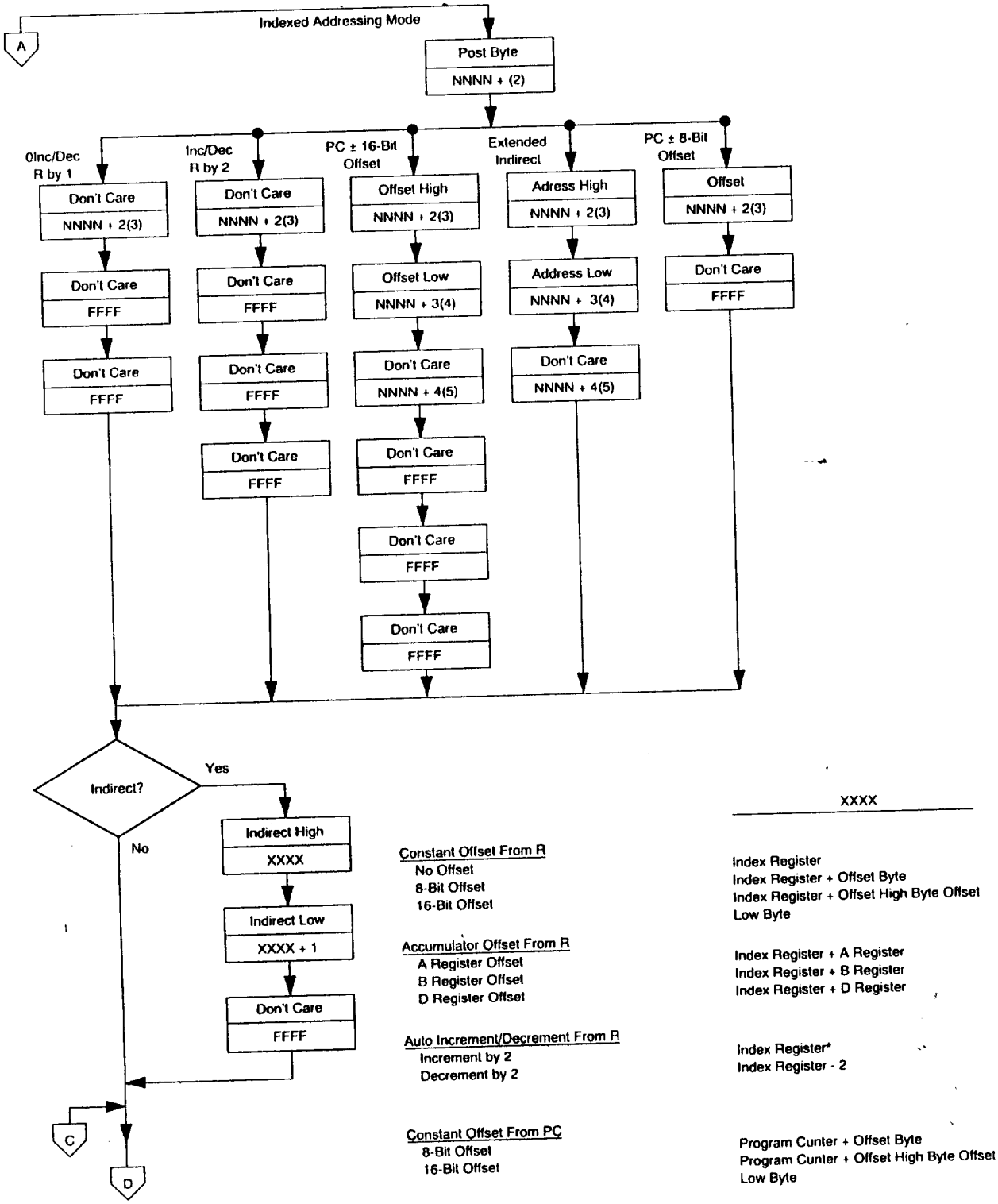

	XXXX
Constant Offset From R	
No Offset	Index Register
8-Bit Offset	Index Register + Offset Byte
16-Bit Offset	Index Register + Offset High Byte Offset Low Byte
Accumulator Offset From R	
A Register Offset	Index Register + A Register
B Register Offset	Index Register + B Register
D Register Offset	Index Register + D Register
Auto Increment/Decrement From R	
Increment by 2	Index Register*
Decrement by 2	Index Register - 2
Constant Offset From PC	
8-Bit Offset	Program Cunter + Offset Byte
16-Bit Offset	Program Cunter + Offset High Byte Offset Low Byte
Extended Indirect	
16-Bit Address	Address High Byte Addres Low Byte

* The index register is incremented following the indexed access

Figure 17 : Cycle-by-cycle performance (Sheet 7 of 9).

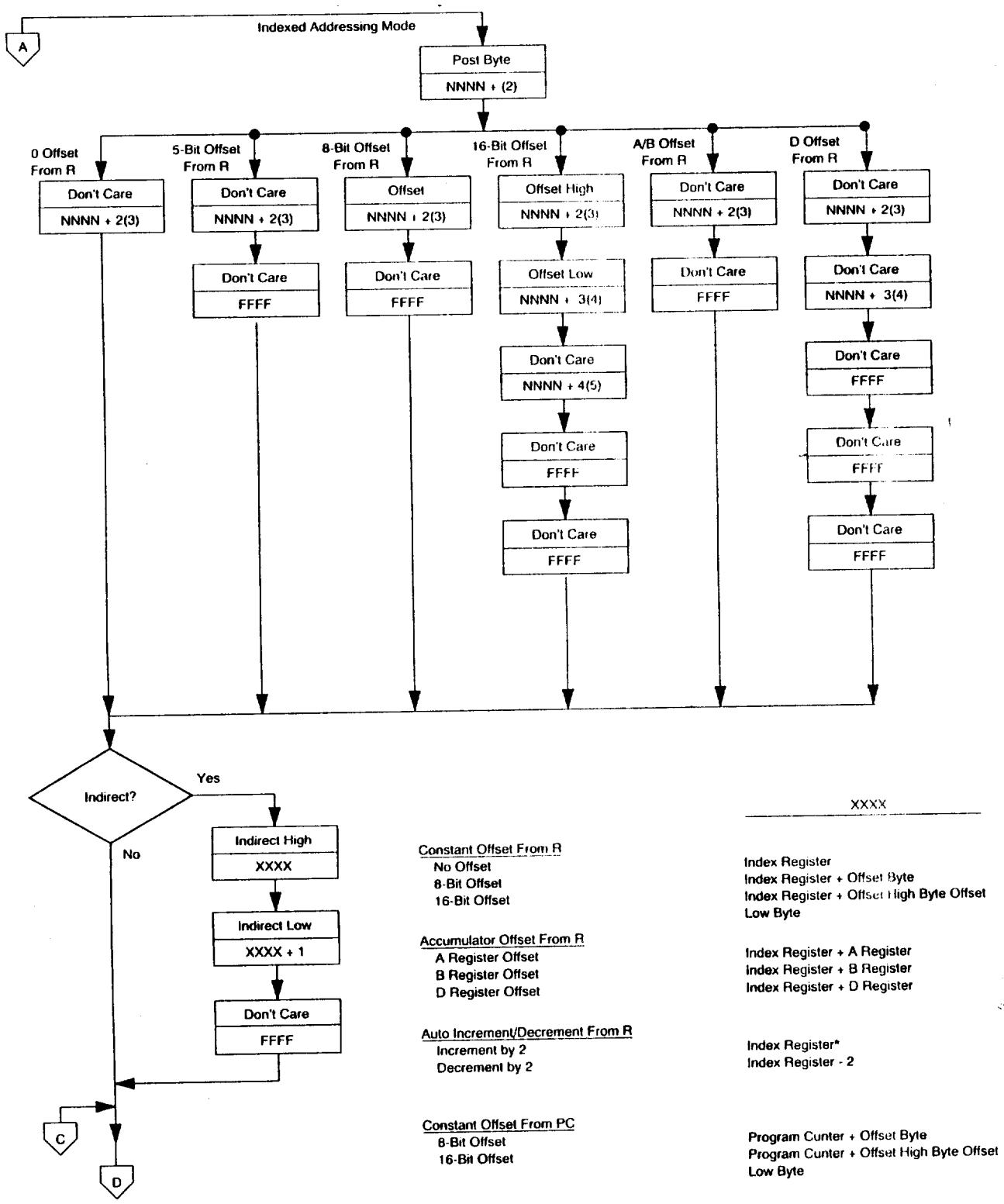

		XXXX
Constant Offset From R		
	No Offset	Index Register
	8-Bit Offset	Index Register + Offset Byte
	16-Bit Offset	Index Register + Offset High Byte Offset Low Byte
Accumulator Offset From R		
	A Register Offset	Index Register + A Register
	B Register Offset	Index Register + B Register
	D Register Offset	Index Register + D Register
Auto Increment/Decrement From R		
	Increment by 2	Index Register*
	Decrement by 2	Index Register - 2
Constant Offset From PC		
	8-Bit Offset	Program Cunter + Offset Byte
	16-Bit Offset	Program Cunter + Offset High Byte Offset Low Byte
Extended Indirect		
	16-Bit Address	Address High Byte Addres Low Byte

* The index register is incremented following the indexed access

Figure 17 : Cycle-by-cycle performance (Sheet 6 of 9).

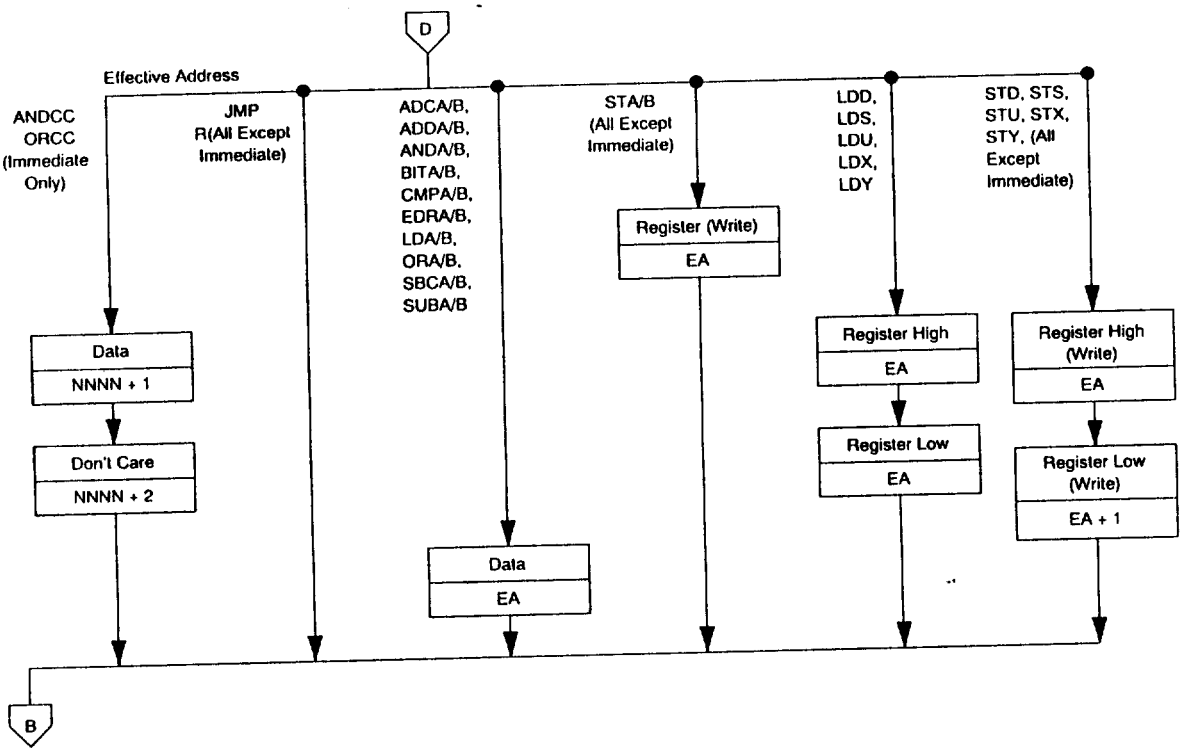

	Effective Address (EA)
Constant Offset From R	
No Offset	Index Register
5-Bit Offset	Index Register
8-Bit Offset	Index Register + Post Byte
16-Bit Offset	Index Register + Post Byte High Post Byte Low
Accumulator Offset From R	
A Register Offset	Index Register + A Register
B Register Offset	Index Register + B Register
D Register Offset	Index Register + D Register
Auto Increment/Decrement From R	
Increment by 1	Index Register*
Increment by 2	Index Register*
Decrement by 1	Index Register + 1
Decrement by 2	Index Register + 2
Constant Offset From PC	
8-Bit Offset	Program Cunter + Offset Byte
16-Bit Offset	Program Cunter + Offset High Byte Offset Low Byte
Direct	Direct Page Register Addres Low
Extended	Address High Addres Low
Immediate	NNNN + 1

* The index register is incremented following the indexed access

Figure 17 : Cycle-by-cycle performance (Sheet 8 of 9).

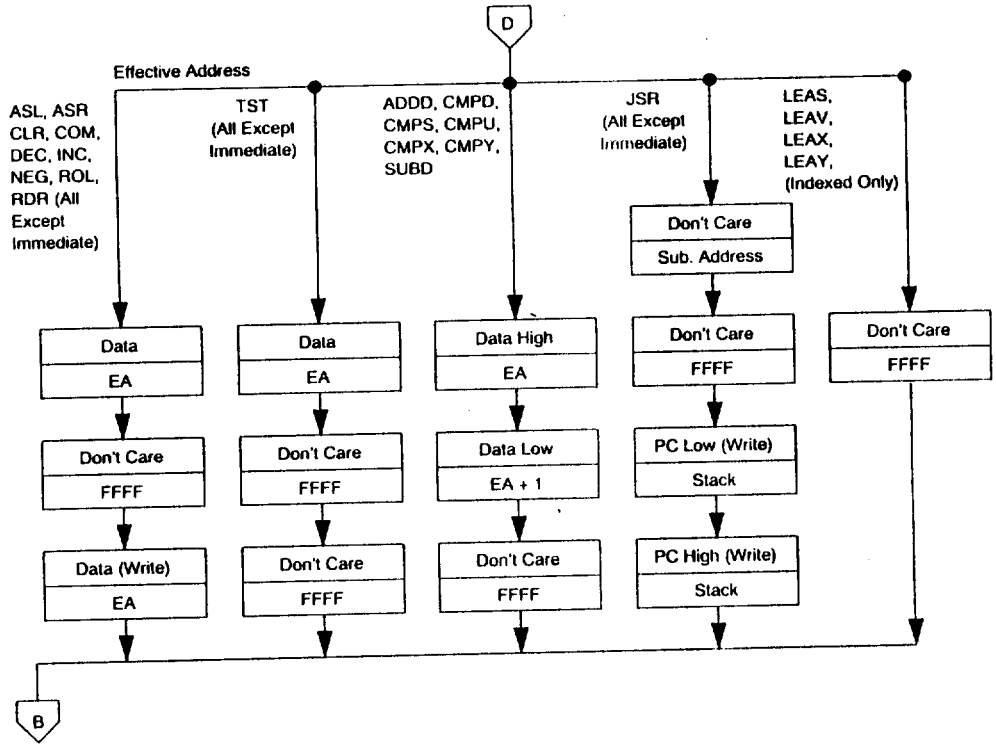

	Effective Address (EA)
Constant Offset From R	
No Offset	Index Register
5-Bit Offset	Index Register
8-Bit Offset	Index Register + Post Byte
16-Bit Offset	Index Register + Post Byte High Post Byte Low
Accumulator Offset From R	
A Register Offset	Index Register + A Register
B Register Offset	Index Register + B Register
D Register Offset	Index Register + D Register
Auto Increment/Decrement From R	
Increment by 1	Index Register*
Increment by 2	Index Register*
Decrement by 1	Index Register + 1
Decrement by 2	Index Register + 2
Constant Offset From PC	
8-Bit Offset	Program Cunter + Offset Byte
16-Bit Offset	Program Cunter + Offset High Byte Offset Low Byte
Direct	Direct Page Register Addres Low
Extended	Address High Addres Low
Immediate	NNNN + 1

* The index register is incremented following the indexed access

Figure 17 : Cycle-by-cycle performance (Sheet 9 of 9).

Table 8 - 8-Bit accumulator and memory instructions

Mnemonic(s)	Operation
ADCA, ADCB	Add memory to accumulator with carry
ADDA, ADDB	Add memory to accumulator
ANDA, ANDB	And memory with accumulator
ASL, ASLA, ASLB	Arithmetic shift of accumulator or memory left
ASR, ASRA, ASRB	Arithmetic shift of accumulator or memory right
BITA, BITB	Bit test memory with accumulator
CLR, CLRA, CLRB	Clear accumulator or memory location
CMPA, CMPB	Compare memory from accumulator
COM, COMA, COMB	Complement accumulator or memory location
DAA	Decimal adjust A accumulator
DEC, DECA, DECB	Decrement accumulator or memory location
EORA, EORB	Exclusive or memory with accumulator
EXG R1, R2	Exchange R1 with R2 (R1, R2 = A, B, CC, DP)
INC, INCA, INCB	Increment accumulator or memory location
LDA, LDB	Load accumulator from memory
LSL, LSLA, LSLB	Logical shift left accumulator or memory location
LSR, LSRA, LSRB	Logical shift right accumulator or memory location
MUL	Unsigned multiply ($A \times B \rightarrow D$)
NEG, NEGA, NEGB	Negate accumulator or memory
ORA, ORB	Or memory with accumulator
ROL, ROLA, ROLB	Rotate accumulator or memory left
ROR, RORA, RORB	Rotate accumulator or memory right
SBCA, SBCB	Subtract memory form accumulator with borrow
STA, STB	Store accumulator to memory
SUBA, SUBB	Subtract memory from accumulator
TST, TSTA, TSTB	Test accumulator or memory location
TFR R1, R2	Transfer R1 to R2 (R1, R2 = A, B, CC, DP)
Note : A, B, CC, or DP may be pushed to (pulled from) either stack with PSHS, PSHU (PULS, PULU) instructions.	

Table 9 - 16-Bit accumulator and memory instructions

Mnemonic(s)	Operation
ADDD	Add memory to D accumulator
CMPD	Compare memory from D accumulator
EXG D, R	Exchange D with X, U, S, U, or PC
LDD	Load D accumulator from memory
SEX	Sign Extend B accumulator into A accumulator
STD	Store D accumulator to memory
SUBD	Subtract memory from D accumulator
TFR D, R	Transfer D to X, Y, S, U, or PC
TFR R, D	Transfer X, Y, S, U, or PC to D
Note : D may be pushed (pulled) to either stack with PSHS, PSHU (PULS, PULU) instructions.	

Table 10 - Index register/stack pointer instructions

Instruction	Description
CMPS, CMPU	Compare memory from stack pointer
CMPX, CMPY	Compare memory from index register
EXG R1, R2	Exchange D, X, Y, S, U or PC with D, X, Y, S, U, or PC
LEAS, LEAU	Load effective address into stack pointer
LEAX, LEAY	Load effective address into index register
LDS, LDU	Load stack pointer from memory
LDX, LDY	Load index register from memory
PSHS	Push A, B, CC, DP, D, X, Y U, or PC onto hardware stack
PSHU	Push A, B, CC, DP, D, X, Y, S, or PC onto user stack
PULS	Pull A, B, CC, DP, D, X, Y, U or PC from hardware stack
PULU	Pull A, B, CC, DP, D, X, Y, S, or PC from hardware stack
STS, STU	Store stack pointer to memory
STX, STY	Store index register to memory
TFR R1, R2	Transfer D, X, Y, S, U or PC to D, X, Y, S, U, or PC
ABX	Add B accumulator to X (unsigned)

Table 11 - Branch instructions

Instruction	Description
SIMPLE BRANCHES	
BEQ, LBEQ	Branch if equal
BNE, LBNE	Branch if not equal
BMI, LBMI	Branch if minus
BPL, LBPL	Branch if plus
BCS, LBCS	Branch if carry set
BCC, LBCC	Branch if carry clear
BVS, LBVS	Branch if overflow set
BVC, LBVC	Branch if overflow clear
SIGNED BRANCHES	
BGT, LBGT	Branch if greater (signed)
BVS, LBVS	Branch if invalid 2's complement result
BGE, LBGE	Branch if greater than or equal (signed)
BEQ, LBEQ	Branch if equal
BNE, LBNE	Branch if not equal
BLE, LBLE	Branch if less than or equal (signed)
BVC, LBVC	Branch if valid 2's complement result
BLT, LBLT	Branch if less than (signed)
USIGNED BRANCHES	
BHI, LBHI	Branch if higher (unsigned)
BCC, LBCC	Branch if higher or same (unsigned)
BHS, LBHS	Branch if higher or same (unsigned)
BEQ, LBEQ	Branch if equal
BNE, LBNE	Branch if not equal
BLS, LBLS	Branch if lower or same (unsigned)
BCS, LBCS	Branch if lower (unsigned)
BLO, LBLO	Branch if lower (unsigned)
OTHER BRANCHES	
BSR, LBSR	Branch to subroutine
BRA, LBRA	Branch always
BRN, LBRN	Branch never

Table 12 - Miscellaneous instructions

Instruction	Description
ANDCC	AND condition code register
CWAI	AND condition code register, then wait for interrupt
NOP	No operation
ORCC	OR condition code register
JMP	Jump
JSR	Jump to subroutine
RTI	Return from interrupt
RTS	Return from subroutine
SWI, SWI2, SWI3	Software interrupt (absolute indirect)
SYNC	Synchronize with interrupt line

Table 13 - Hexadecimal values of machine codes

OP	Mnem	Mode	~	#	OP	Mnem	Mode	~	#	OP	Mnem	Mode	~	#
00	NEG	Direct	6	2	30	LEAX	Indexed	4+	2+	60	NEG	Indexed	6+	2+
01	*				31	LEAY		4+	2+	61	*			
02	*				32	LEAS		4+	2+	62	*			
03	COM		6	2	33	LEAU	Indexed	4+	2+	63	COM		6+	2+
04	LSR		6	2	34	PSHS	Immed	5+	2	64	LSR		6+	2+
05	*				35	PULS	Immed	5+	2	65	*			
06	ROR		6	2	36	PSHU	Immed	5+	2	66	ROR		6+	2+
07	ASR		6	2	37	PULU	Immed	5+	2	67	ASR		6+	2+
08	ASL, LSL		6	2	38	*	—			68	ASL, LSL		6+	2+
09	ROL		6	2	39	RTS	Inherent	5	1	69	ROL		6+	2+
0A	DEC		6	2	3A	ABX		3	1	6A	DEC		6+	2+
0B	*				3B	RTI		6/15	1	6B	*			
0C	INC		6	2	3C	CWAI		≥ 20	2	6D	INC		6+	2+
0D	TST		6	2	3D	MUL	Inherent	11	1	6D	TST		6+	2+
0E	JMP		3	2	3E	*				6E	JMP		3+	2+
0F	CLR	Direct	6	2	3F	SWI	Inherent	19	1	6F	CLR	Indexed	6+	2+
10	Page 2				40	NEGA	Inherent	2	1	70	NEG	Extended	7	3
11	Page 3				41	*				71	*			
12	NOP	Inherent	2	1	42	*				72	*			
13	SYNC	Inherent	≥ 4	1	43	COMA		2	1	73	COM		7	3
14	*				44	LSRA		2	1	74	LSR		7	3
15	*				45	*				75	*			
16	LBRA	Relative	5	3	46	RORA		2	1	76	ROR		7	3
17	LBSR	Relative	9	3	47	ASRA		2	1	77	ASR		7	3
18	*				48	ASLA, LSLA		2	1	78	ASL, LSL		7	3
19	DAA	Inherent	2	1	49	ROLA		2	1	79	ROL		7	3
1A	ORCC	Immed	3	2	4A	DECA		2	1	7A	DEC		7	3
1B	*				4B	*				7B	*			
1C	ANDCC	Immed	3	2	4C	INCA		2	1	7C	INC		7	3
1D	SEX	Inherent	2	1	4D	TSTA		2	1	7D	TST		7	3
1E	EXG	Immed	8	2	4E	*				7E	JMP		4	3
1F	TFR	Immed	6	2	4F	CLRA	Inherent	2	1	7F	CLR	Extended	7	3
20	BRA	Relative	3	2	50	NEGB	Inerent	2	1	80	SUBA	Immed	2	2
21	BRN		3	2	51	*				81	CMPA		2	2
22	BHI		3	2	52	*				82	SBCA		2	2
23	BLS		3	2	53	COMB		2	1	83	SUBD		4	3
24	BHS, BCC		3	2	54	LSRB		2	1	84	ANDA		2	2
25	BLO, BCS		3	2	55	*				85	BITA		2	2
26	BNE		3	2	56	RORB		2	1	86	LDA		2	2
27	BEQ		3	2	57	ASRB		2	1	87	*			
28	BVC		3	2	58	ASLB, LSLB		2	1	88	EORA		2	2
29	BVS		3	2	59	ROLB		2	1	89	ADCA		2	2
2A	BPL		3	2	5A	DECB		2	1	8A	ORA		2	2
2B	BMI		3	2	5B	*				8B	ADDA		2	2
2C	BGE		3	2	5C	INCB		2	1	8C	CMPX		4	3
2D	BLT		3	2	5D	TSTB		2	1	8D	BSR	Immed	7	2
2E	BGT		3	2	5E	*				8E	LDX	Relative	3	3
2F	BLE	Relative	3	2	5F	CLRB	Inherent	2	1	8F	*	Immed		

Table 13 - Hexadecimal values of machine codes (Continued)

OP	Mnem	Mode	~	#
90	SUBA	Direct	4	2
91	CMPA	↕	4	2
92	SBCA		4	2
93	SUBD		6	2
94	ANDA		4	2
95	BITA		4	2
96	LDA		4	2
97	STA		4	2
98	EORA		4	2
99	ADCA		4	2
9A	ORA		4	2
9B	ADDA		4	2
9C	CMPX		6	2
9D	JSR		7	2
9E	LDX		5	2
9F	STX	Direct	5	2
A0	SUBA	Indexed	4+	2+
A1	CMPA	↕	4+	2+
A2	SBCA		4+	2+
A3	SUBD		6+	2+
A4	ANDA		4+	2+
A5	BITA		4+	2+
A6	LDA		4+	2+
A7	STA		4+	2+
A8	EORA		4+	2+
A9	ADCA		4+	2+
AA	ORA		4+	2+
AB	ADDA		4+	2+
AC	CMPX		6+	2+
AD	JSR		7+	2+
AE	LDX		5+	2+
AF	STX	Indexed	5+	2+
B0	SUBA	Extended	5	3
B1	CMPA	↕	5	3
B2	SBCA		5	3
B3	SUBD		7	3
B4	ANDA		5	3
B5	BITA		5	3
B6	LDA		5	3
B7	STA		5	3
B8	EORA		5	3
B9	ADCA		5	3
BA	ORA		5	3
BB	ADDA		5	3
BC	CMPX		7	3
BD	JSR		8	3
BE	LDX		6	3
BF	STX	Extended	6	3

Note : All unused opcodes are both undefined and illegal.

OP	Mnem	Mode	~	#
C0	SUBB	Immed	2	2
C1	CMPB	↕	2	2
C2	SBCB		2	2
C3	ADDD		4	3
C4	ANDB		2	2
C5	BITB	Immed	2	2
C6	LDB	Immed	2	2
C7	*	↕		
C8	EORB		2	2
C9	ADCB		2	2
CA	ORB		2	2
CB	ADDB		2	2
CC	LDD		3	3
CD	*			
CE	LDU	Immed	3	3
CF	*			
D0	SUBB	Direct	4	2
D1	CMPB	↕	4	2
D2	SBCB		4	2
D3	ADDD		6	2
D4	ANDB		4	2
D5	BITB		4	2
D6	LDB		4	2
D7	STB		4	2
D8	EORB		4	2
D9	ADCB		4	2
DA	ORB		4	2
DB	ADDB		4	2
DC	LDD		5	2
DD	STD		5	2
DE	LDU		5	2
DF	STU	Direct	5	2
E0	SUBB	Indexed	4+	2+
E1	CMPB	↕	4+	2+
E2	SBCB		4+	2+
E3	ADDD		6+	2+
E4	ANDB		4+	2+
E5	BITB		4+	2+
E6	LDB		4+	2+
E7	STB		4+	2+
E8	EORB		4+	2+
E9	ADCB		4+	2+
EA	ORB		4+	2+
EB	ADDB		4+	2+
EC	LDD		5+	2+
ED	STD		5+	2+
EE	LDU		5+	2+
EF	STU	Indexed	5+	2+
F0	SUBB	Extended	5	3
F1	CMPB	↕	5	3
F2	SBCB		5	3
F3	ADDD		7	3
F4	ANDB		5	3
F5	BITB		5	3
F6	LDB		5	3
F7	STB		5	3
F8	EORB		5	3
F9	ADCB		5	3
FA	ORB		5	3
FB	ADDB	Extended	5	3
FC	LDD	Extended	6	3
FD	STD	↕	6	3
FE	LDU		6	3
FF	STU	Extended	6	3

OP	Mnem	Mode	~	#
Page 2 and 3 Machine Codes				
1021	LBRN	Relative	5	4
1022	LBHI	↕	5(6)	4
1023	LBLS		5(6)	4
1024	LBHS, LBCC		5(6)	4
1025	LBCS, LBLO		5(6)	4
1026	LBNE		5(6)	4
1027	LBEQ		5(6)	4
1028	LBVC		5(6)	4
1029	LBVS		5(6)	4
102A	LBPL		5(6)	4
102B	LBMI		5(6)	4
102C	LBGE		5(6)	4
102D	LBLT		5(6)	4
102E	LBGT		5(6)	4
102F	LBLE	Relative	5(6)	4
103F	SWI2	Inherent	20	2
1083	CMPD	Immed	5	4
108C	CMPY	↕	5	4
108E	LDY	Immed	4	4
1093	CMPD	Direct	7	3
109C	CMPY	↕	7	3
109E	LDY		6	3
109F	STY	Direct	6	3
10A3	CMPD	Indexed	7+	3+
10AC	CMPY	↕	7+	3+
10AE	LDY		6+	3+
10AF	STY	Indexed	6+	3+
10B3	CMPD	Extended	8	4
10BC	CMPY	↕	8	4
10BE	LDY		7	4
10BF	STY	Extended	7	4
10CE	LDS	Immed	4	4
10DE	LDS	Direct	6	3
10DF	STS	Direct	6	3
10EE	LDS	Indexed	6+	3+
10EF	STS	Indexed	6+	3+
10FE	LDS	Extended	7	4
10FF	STS	Extended	7	4
113F	SWI3	Inherent	20	2
1183	CMPU	Immed	5	4
118C	CMPS	Immed	5	4
1193	CMPU	Direct	7	3
119C	CMPS	Direct	7	3
11A3	CMPU	Indexed	7+	3+
11AC	CMPS	Indexed	7+	3+
11B3	CMPU	Extended	8	4
11BC	CMPS	Extended	8	4

Legend :

~ Number of MPU cycles (less possible push pull or indexed-mode cycles)

Number of program bytes

* Denotes unused opcode

Instruction	Forms	Addressing Modes: Immediate Op	Immediate ~	Immediate #	Direct Op	Direct ~	Direct #	Indexed Op	Indexed ~	Indexed #	Extended Op	Extended ~	Extended #	Inherent Op	Inherent ~	Inherent #	Description	5 H	3 N	2 Z	1 V	0 C
ABX														3A	3	1	B + X → X (Unsigned)	•	•	•	•	•
ADC	ADCA ADCB	89 C9	2 2	2 2	99 D9	4 4	2 2	A9 E9	4 + 4 +	2 + 2 +	B9 F9	5 5	3 3				A + M + C → A B + M + C → B	↕ ↕	↕ ↕	↕ ↕	↕ ↕	↕ ↕
ADD	ADDA ADDB ADDD	88 CB C3	2 2 4	2 2 3	9B DB D3	4 4 6	2 2 2	AB EB E3	4 + 4 + 6 +	2 + 2 + 2 +	BB FB F3	5 5 7	3 3 3				A + M → A B + M → B D + M:M + 1 → D	↕ ↕ •	↕ ↕ ↕	↕ ↕ ↕	↕ ↕ ↕	↕ ↕ ↕
AND	ANDA ANDB ANDCC	84 C4 1C	2 2 3	2 2 2	94 D4	4 4	2 2	A4 E4	4 + 4 +	2 + 2 +	B4 F4	5 5	3 3				A ∧ M → A B ∧ M → B CC ∧ IMM → CC	• • •	↕ ↕ •	↕ ↕ •	0 0 •	• • 7
ASL	ASLA ASLB ASL				08	6	2	68	6 +	2 +	78	7	3	48 58	2 2	1 1	A, B, M } c ← b7 … b0 ← 0	8 8 8	↕ ↕ ↕	↕ ↕ ↕	↕ ↕ ↕	↕ ↕ ↕
ASR	ASRA ASRB ASR				07	6	2	67	6 +	2 +	77	7	3	47 57	2 2	1 1	A, B, M } b7 → … b0 → c	8 8 8	↕ ↕ ↕	↕ ↕ ↕	• • •	↕ ↕ ↕
BIT	BITA BITB	85 C5	2 2	2 2	95 D5	4 4	2 2	A5 E5	4 + 4 +	2 + 2 +	B5 F5	5 5	3 3				Bit Test A (M ∧ A) Bit Test B (M ∧ B)	• •	↕ ↕	↕ ↕	0 0	• •
CLR	CLRA CLRB CLR				0F	6	2	6F	6 +	2 +	7F	7	3	4F 5F	2 2	1 1	0 → A 0 → B 0 → M	• • •	0 0 0	1 1 1	0 0 0	0 0 0
CMP	CMPA CMPB CMPD CMPS CMPU CMPX CMPY	81 C1 10 83 11 8C 11 83 8C 10 8C	2 2 5 5 5 4 5	2 2 4 4 4 3 4	91 D1 10 93 11 9C 11 93 9C 10 9C	4 4 7 7 7 6 7	2 2 3 3 3 2 3	A1 E1 10 A3 11 AC 11 A3 AC 10 AC	4 + 4 + 7 + 7 + 7 + 6 + 7 +	2 + 2 + 3 + 3 + 3 + 2 + 3 +	B1 F1 10 B3 11 BC 11 B3 BC 10 BC	5 5 8 8 8 7 8	3 3 4 4 4 3 4				Compare M from A Compare M from B Compare M:M + 1 from D Compare M:M + 1 from S Compare M:M + 1 from U Compare M:M + 1 from X Compare M:M + 1 from Y	8 8 • • • • •	↕ ↕ ↕ ↕ ↕ ↕ ↕	↕ ↕ ↕ ↕ ↕ ↕ ↕	↕ ↕ ↕ ↕ ↕ ↕ ↕	↕ ↕ ↕ ↕ ↕ ↕ ↕
COM	COMA COMB COM				03	6	2	63	6 +	2 +	73	7	3	43 53	2 2	1 1	$\overline{A}$ → A $\overline{B}$ → B $\overline{M}$ → M	• • •	↕ ↕ ↕	↕ ↕ ↕	0 0 0	1 1 1
CWAI		3C	≥20	2													CC ∧ IMM → Wait for interrupt					7
DAA														19	2	1	Decimal adjust A	•	↕	↕	0	↕
DEC	DECA DECB DEC				0A	6	2	6A	6 +	2 +	7A	7	3	4A 5A	2 2	1 1	A − 1 → A B − 1 → B M + 1 → M	• • •	↕ ↕ ↕	↕ ↕ ↕	↕ ↕ ↕	• • •
EOR	EORA EORB	88 C8	2 2	2 2	98 D8	4 4	2 2	AB E8	4 + 4 +	2 + 2 +	B8 F8	5 5	3 3				A ∨ M → A B ∨ M → B	• •	↕ ↕	↕ ↕	0 0	• •
EXG	R1, R2	1E	8	2													R1 → R2[1]	•	•	•	•	•
INC	INCA INCB INC				0C	6	2	6C	6 +	2 +	7C	7	3	4C 5C	2 2	1 1	A + 1 → A B + 1 → B M + 1 → M	• • •	↕ ↕ ↕	↕ ↕ ↕	↕ ↕ ↕	• • •
JMP					0E	3	2	6E	3 +	2 +	7E	4	3				EA[3] → PC	•	•	•	•	•
JSR					9D	7	2	AD	7 +	2 +	BD	8	3				Jump to subroutine	•	•	•	•	•
LD	LDA LDB LDD LDS LDU LDX LDY	86 C6 CC 10 CE CE 8E 10 8E	2 2 3 4 3 3 4	2 2 3 4 3 3 4	96 D6 DC 10 DE DE 9E 10 9E	4 4 5 6 5 5 6	2 2 2 3 2 2 3	A6 E6 EC 10 EE EE AE 10 AE	4 + 4 + 5 + 6 + 5 + 5 + 6 +	2 + 2 + 2 + 3 + 2 + 2 + 3 +	B6 F6 FC 10 FE FE BE 10 BE	5 5 6 7 6 6 7	3 3 3 4 3 3 4				M → A M → B M:M + 1 → D M:M + 1 → S M:M + 1 → U M:M + 1 → X M:M + 1 → Y	• • • • • • •	↕ ↕ ↕ ↕ ↕ ↕ ↕	↕ ↕ ↕ ↕ ↕ ↕ ↕	0 0 0 0 0 0 0	• • • • • • •

Figure 18 : Programming AID.

Instruction	Forms	Addressing Modes														Description	5	3	2	1	0
		Immediate			Direct			Indexed			Extended			Inherent			H	N	Z	V	C
		Op	~	#	Op	~	#	Op	~	#	Op	~	#	Op	~	#					
LEA	LEAS							32	4+	2+							EA[3] → S	•	•	•	•	•
	LEAU							33	4+	2+							EA[3] → U	•	•	•	•	•
	LEAX							30	4+	2+							EA[3] → X	•	•	↕	•	•
	LEAY							31	4+	2+							EA[3] → Y	•	•	↕	•	•
LSL	LSLA													48	2	1	A } c b7 b0 ← 0	↕	↕	↕	↕	↕
	LSLB													58	2	1	B } c b7 b0 ← 0	•	↕	↕	↕	↕
	LSL				08	6	2	68	6+	2+	78	7	3				M } c b7 b0 ← 0	•	↕	↕	↕	↕
LSR	LSRA													44	2	1	A } 0 → b7 b0 → c	•	0	↕	•	↕
	LSRB													54	2	1	B } 0 → b7 b0 → c	•	0	↕	•	↕
	LSR				04	6	2	64	6+	2+	74	7	3				M } 0 → b7 b0 → c	•	0	↕	•	↕
MUL														3D	11	1	A × B → D (unsigned)	•	•	↕	•	9
NEG	NEGA													40	2	1	$\bar{A}$ + 1 → A	8	↕	↕	↕	↕
	NEGB													50	2	1	$\bar{B}$ + 1 → B	8	↕	↕	↕	↕
	NEG				00	6	2	60	6+	2+	70	7	3				$\bar{M}$ + 1 → M	8	↕	↕	↕	↕
NOP														12	2	1	No operation	•	•	•	•	•
OR	ORA	8A	2	2	9A	4	2	AA	4+	2+	BA	5	3				A V M → A	•	↕	↕	0	•
	ORB	CA	2	2	DA	4	2	EA	4+	2+	FA	5	3				B V M → B	•	↕	↕	0	•
	ORCC	1A	3	2													CC V IMM → CC				7	
PSH	PSHS	34	5+[3]	2													Push registers on S stack	•	•	•	•	•
	PSHU	36	5+[3]	2													Push registers on U stack	•	•	•	•	•
PUL	PULS	35	5+[3]	2													Pull registers from S stack	•	•	•	•	•
	PULU	37	5+[3]	2													Pull registers from S stack	•	•	•	•	•
ROL	ROLA													49	2	1	A } c b7 b0 ← c	•	↕	↕	↕	↕
	ROLB													59	2	1	B } c b7 b0 ← c	•	↕	↕	↕	↕
	ROL				09	6	2	69	6+	2+	79	7	3				M } c b7 b0 ← c	•	↕	↕	↕	↕
ROR	RORA													46	2	1	A } c → b7 b0 → c	•	↕	↕	•	↕
	RORB													56	2	1	B } c → b7 b0 → c	•	↕	↕	•	↕
	ROR				06	6	2	66	6+	2+	76	7	3				M } c → b7 b0 → c	•	↕	↕	•	↕
RTI														38	6/15	1	Return from interrupt					7
RTS														39	5	1	Return from subroutine	•	•	•	•	•
SBC	SBCA	82	2	2	92	4	2	A2	4+	2+	B2	5	3				A − M − C → A	8	↕	↕	↕	↕
	SBCB	C2	2	2	D2	4	2	E2	4+	2+	F2	5	3				B − M − C → B	8	↕	↕	↕	↕
SEX														1D	2	1	Sign extend B into A	•	↕	↕	0	•
ST	STA				97	4	2	A7	4+	2+	B7	5	3				A → M	•	↕	↕	0	•
	STB				D7	4	2	E7	4+	2+	F7	5	3				B → M	•	↕	↕	0	•
	STD				DD	5	2	ED	5+	2+	FD	6	3				D → M:M + 1	•	↕	↕	0	•
	STS				10	6	3	10	6+	3+	10	7	4				S → M:M + 1	•	↕	↕	0	•
					DF			EF			FF										
	STU				DF	5	2	EF	5+	2+	FF	6	3				U → M:M + 1	•	↕	↕	0	•
	STX				9F	5	2	AF	5+	2+	BF	6	3				X → M:M + 1	•	↕	↕	0	•
	STY				10	6	3	10			10	7	4				Y → M:M + 1	•	↕	↕	0	•
					9F			AF	6+	3+	BF										
SUB	SUBA	80	2	2	90	4	2	A0	4+	2+	B0	5	3				A − M → A	8	↕	↕	↕	↕
	SUBB	C0	2	2	D0	4	2	E0	4+	2+	F0	5	3				B − M → B	8	↕	↕	↕	↕
	SUBD	83	4	3	93	6	2	A3	6+	2+	B3	7	3				D − M:M + 1 → D	•	↕	↕	↕	↕
SWI	SWI[4]													3F	19	1	Software interrupt 1	•	•	•	•	•
	SWI2[4]													10 3F	20	2	Software interrupt 2	•	•	•	•	•
	SWI3[4]													11 3F	20	1	Software interrupt 3	•	•	•	•	•

Figure 18 : Programming AID (continued)

Instruction	Forms	Addressing Modes															Description	5	3	2	1	0
		Immediate			Direct			Indexed			Extended			Inherent				H	N	Z	V	C
		Op	~	#	Op	~	#	Op	~	#	Op	~	#	Op	~	#						
SYNC														13	≥4	1	Synchronize to interrupt	•	•	•	•	•
TFR	R1, R2	1F	6	2													R1 → R2[2]	•	•	•	•	•
TST	TSTA TSTB TST				0D	6	2	6D	6+	2+	7D	7	3	4D 5D	2 2	1 1	Test A Test B Test M	• • •	¦ ¦ ¦	¦ ¦ ¦	0 0 0	• • •

Note 1: This column gives a base cycle and byte count. To obtain total count, add the values obtained from the INDEDEX ADDRESSING MODE table, Table 2.

Note 2: R1 and R2 may be any pair of 8 bit or any pair of 16 bit registers.
The 8 bit registers are : A, B, CC, DP
The 16 bit registers are : X, Y, U, S, D, PC.

Note 3: EA is the effective address.

Note 4: The PSH and PUL instructions require 5 cycles plus 1 cycle for each byte pushed or pulled.

Note 5: 5(6) means : 5 cycles if branch not taken, 6 cycles if taken (Branch instructions).

Note 6: SWI sets I and F bits. SWI2 and SWI3 do not affect I and F.

Note 7: Conditions Codes set as a direct reseult of the instruction.

Note 8: Vaue of half-carry flag is undefined.

Note 9: Special Case – Carry set if b7 is SET.

Legend :

OP Operation Code (Hexadecimal)
~ Number of MPU Cycles
# Number of Program Bytes
+ Arithmetic Plus
– Arithmetic Minus
• Multiply

$\bar{M}$ Complement of M
→ Transfer Into
H Half-carry (from bit 3)
N Negative (sign byte)
Z Zero result
V Overflow, 2's complement
C Carry from ALU

¦ Test and set if true, cleared otherwise
• Not Affected
CC Condition Code Register
: Concatenation
∨ Logical or
∧ Logical and
∀ Logical Exclusive or

Figure 18 : Programming AID (continued).

Branch Instructions

Instruction	Forms	Addressing Modes			Description	5	3	2	1	0
		Relative				H	N	Z	V	C
		Op	~5	#						
BCC	BCC LBCC	24 10 24	3 5(6)	2 4	Branch C = 0 Long branch C = 0	• •	• •	• •	• •	• •
BCS	BCS LBCS	25 10 25	3 5(6)	2 4	Branch C = 1 Long branch C = 1	• •	• •	• •	• •	• •
BEQ	BEQ LBEQ	27 10 27	3 5(6)	2 4	Branch Z = 1 Long branch Z = 0	• •	• •	• •	• •	• •
BGE	BGE LBGE	2C 10 2C	3 5(6)	2 4	Branch ≥ Zero Long branch ≥ Zero	• •	• •	• •	• •	
BGT	BGT LBGT	2E 10 2E	3 5(6)	2 4	Branch > Zero Long branch > Zero	• •	• •	• •	• •	
BHI	BHI LBHI	22 10 22	3 5(6)	2 4	Branch higher Long branch higher	• •	• •	• •		
BHS	BHS LBHS	24 10 24	3 5(6)	2 4	Branch higher or same Long branch higher or same	• •	• •	• •		
BLE	BLE LBLE	2F 10 2F	3 5(6)	2 4	Branch ≤ Zero Long branch ≤ Zero	• •	• •			
BLO	BLO LBLO	25 10 25	3 5(6)	2 4	Branch lower Long branch lower	• •				

Branch Instructions (Continued)

Instruction	Forms	Addressing Modes Relative Op	~ 5	#	Description	5 H	3 N	2 Z	1 V	0 C
BLS	BLS LBLS	23 10 23	3 5(6)	2 4	Branch Lower or Same Long branch Lower or Same	• •	• •	• •	• •	• •
BLT	BLT LBLT	2D 10 2D	3 5(6)	2 4	Branch < Zero Long branch < Zero	• •	• •	• •	• •	• •
BMI	BMI LBMI	2B 10 2B	3 5(6)	2 4	Branch minus Long branch < Minus	• •	• •	• •	• •	• •
BNE	BNE LBNE	26 10 26	3 5(6)	2 4	Branch Z = 0 Long branch Z ≠ 0	• •	• •	• •	• •	• •
BPL	BPL LBPL	2A 10 2A	3 5(6)	2 4	Branch plus Long branch plus	• •	• •	• •	• •	• •
BRA	BRA LBRA	20 16	3 5	2 3	Branch always Long branch always	• •	• •	• •	• •	• •
BRN	BRN LBRN	21 10 21	3 5	2 4	Branch never Long branch never	• •	• •	• •	• •	• •
BSR	BSR LBSR	8D 17	7 9	2 3	Branch to subroutine Long branch to subroutine	• •	• •	• •	• •	• •
BVC	BVC LBVC	28 10 28	3 5(6)	2 4	Branch V = 0 Long branch V = 0	• •	• •	• •	• •	• •
BVS	BVS LBVS	29 10 29	3 5(6)	2 4	Branch V = 1 Long branch V = 1	• •	• •	• •	• •	• •

Simple branches

	OP	~	#
BRA	20	3	2
LBRA	16	5	3
BRN	21	3	2
LBRN	1021	5	4
BSR	8D	7	2
LBSR	17	9	3

Simple conditional branches (Notes 1-4)

Test	True	OP	False	OP
N = 1	BMI	2B	BPL	2A
Z = 1	BEQ	27	BNE	26
V = 1	BVS	29	BVC	28
C = 1	BCS	25	BCC	24

Unsigned condtional branches (Notes 1-4)

Test	True	OP	False	OP
r > m	BHI	22	BLS	23
r ≥ m	BHS	24	BLO	25
r = m	BEQ	27	BNE	26
r ≤ m	BLS	23	BHI	22
r < m	BLO	25	BHS	24

Signed conditional branches (Notes 1-4)

Test	True	OP	False	OP
r > m	BGT	2E	BLE	2F
r ≥ m	BGE	2C	BLT	2D
r = m	BEQ	27	BNE	26
r ≤ m	BLE	2F	BGT	2E
r < m	BLT	2D	BGE	2C

Note 1 : All conditional branches have both short and long variations.
Note 2 : All short branches are two bytes and require three cycles.
Note 3 : All conditional long branches are formed by prefixing the short opcode with $10 and using a 16-bit destination offset.
Note 4 : All conditional long branches require four bytes and six cycles if the branch is taken or five if the branch is not taken.
Note 5 : 5(6) means : 5 cycles if branch not taken, 6 cycles if taken.

Indexed addressing modes

Type	Forms	Non indirect				Indirect			
		Assembler form	Postbyte opcode	+ ~	+ =	Assembler form	Postbyte opcode	+ ~	+ =
Constant offset from R	No offset	,R	1RR00100	0	0	[,R]	1RR10100	3	0
	5-bit offset	n, R	0RRnnnnn	1	0	defaults to 8-bit			
	8-bit offset	n, R	1RR01000	1	1	[n, R]	1RR11000	4	1
	16-bit offset	n, R	1RR01001	4	2	[n, R]	1RR11001	7	2
Accumulator offset from R	A register offset	A, R	1RR00110	1	0	[A, R]	1RR10110	4	0
	B register offset	B, R	1RR00101	1	0	[B, R]	1RR10101	4	0
	D register offset	D, R	1RR01011	4	0	[D, R]	1RR11011	7	0
Auto increment/decrement R	Increment by 1	,R+	1RR00000	2	0	not allowed			
	Increment by 2	,R++	1RR00001	3	0	[,R++]	1RR10001	6	0
	Decrement by 1	,-R	1RR00010	2	0	not allowed			
	Decrement by 2	,--R	1RR00011	3	0	[n, --R]	1RR10011	6	0
Constant offset from PC	8-bit offset	n, PCR	1xx01100	1	1	[n, PCR]	1xx11100	4	1
	16-bit offset	n, PCR	1xx01101	5	2	[n, PCR]	1xx11101	8	2
Extended indirect	16-bit address					[n]	10011111	5	2

R = X, Y, U or S
x = don't care

RR:
00 = X
01 = Y
10 = U
11 = S

Indexed addressing postbyte register bit assignments

Postbyte register bit								Indexed addressing mode
7	6	5	4	3	2	1	0	
0	R	R	x	x	x	x	x	EA = ,R + 5 bit offset
1	R	R	0	0	0	0	0	,R +
1	R	R	i	0	0	0	1	,R + +
1	R	R	0	0	0	1	0	,- R
1	R	R	i	0	0	1	1	,- - R
1	R	R	i	0	1	0	0	EA = ,R + 0 offset
1	R	R	i	0	1	0	1	EA = ,R + ACCB offset
1	R	R	i	0	1	1	0	EA = ,R + ACCA offset
1	R	R	i	1	0	0	0	EA = ,R + 8 bit offset
1	R	R	i	1	0	0	1	EA = ,R + 16 bit offset
1	R	R	i	1	0	1	1	EA = ,R + D offset
1	x	x	i	1	1	0	0	EA = ,PC + 8 bit offset
1	x	x	i	1	1	0	1	EA = ,PC + 16 bit offset
1	R	R	1	1	1	1	1	EA = [,Address]

Addressing Mode Field
Indirect Field
(Sign bit when b_7 = 0)
Register Field : RR
00 = X
01 = Y
10 = U
11 = S

x = Don't Care

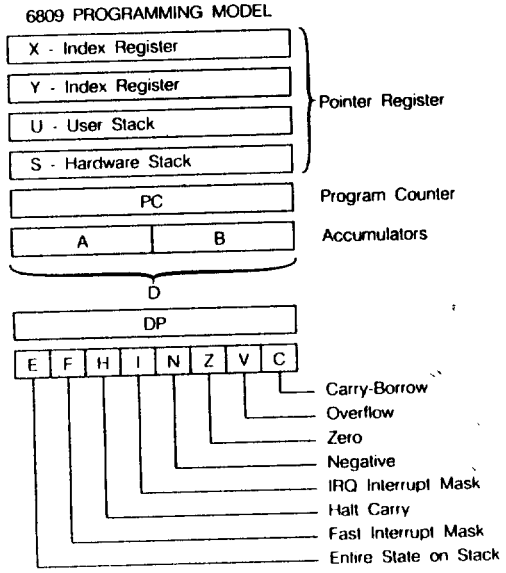

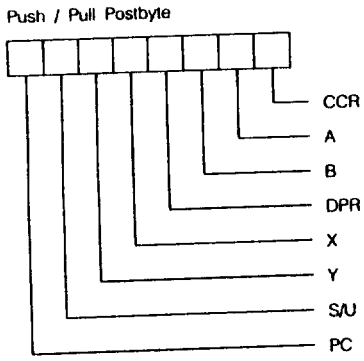

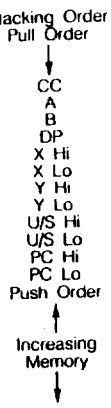

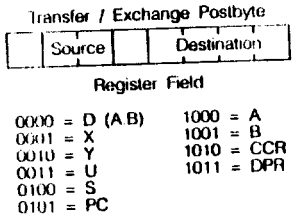

7 - PREPARATION FOR DELIVERY

7.1 - Packaging

Microcircuit are prepared for delivery in accordance with MIL-M-38510 or CECC 90000.

7.2 - Certificate of compliance

TMS offers a certificate of compliance with each shipment of parts, affirming the prodcuts are in compliance either with MIL-STD-883 or CECC 90000 and guarantying the parameters are tested at extreme temperatures for the entire temperature range.

8 - HANDLING

MOS devices must be handled with certain precautions to avoid damage due to accumulation of static charge. Input proctection devices have been designed in the chip to minimize the effect of this static buildup. However, the following handling practices are recommended :

a) Device should be handled on benches with conductive and grounded surface.

b) Ground test equipement, tools and operator.

c) Do not handle devices by the leads.

d) Store devices in conductive foam or carriers.

e) Avoid use of plastic, rubber, or silk in MOS areas.

f) Maintain relative humidity above 50 %, if practical.

9 - PACKAGE MECHANICAL DATA

9.1 - DIL 40 : Ceramic Cerdip package

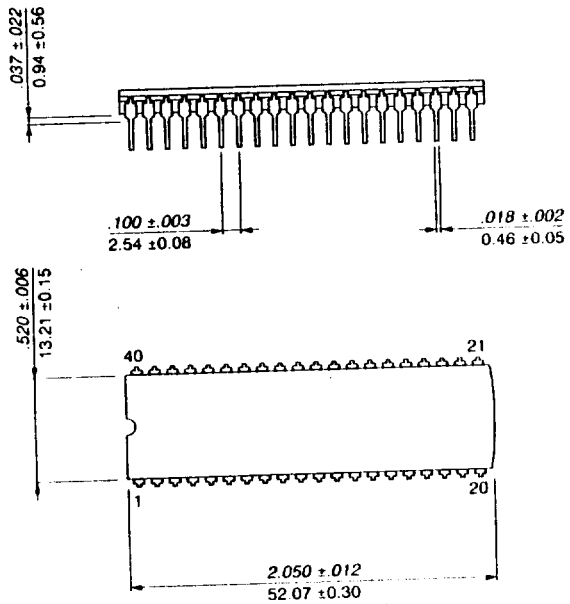

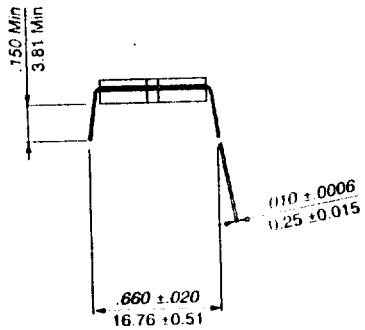

9.2 - DIL 40 : Ceramic Side Brazed package

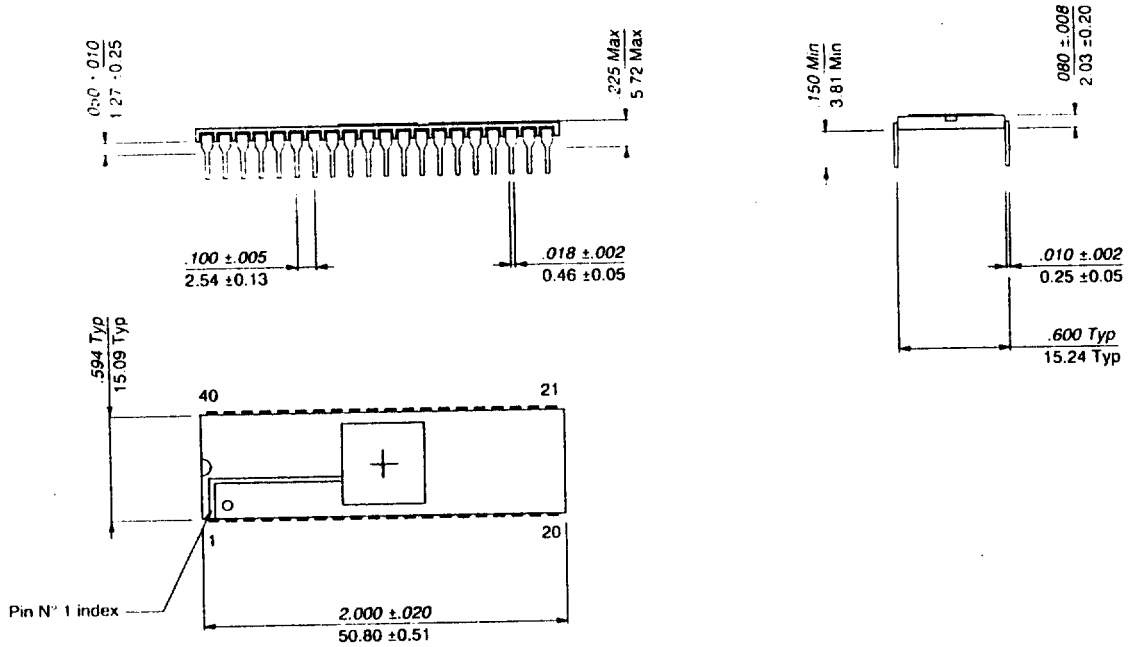

10 - TERMINAL CONNECTIONS

10.1 - DIL 40 pin assignment

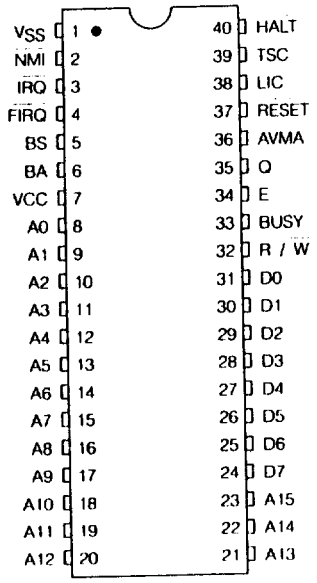

11 - ORDERING INFORMATION

11.1 - Hi-REL product

Commercial TMS Part-Number (see Note)	Norms	Package	Temperature range T_C (°C)	Frequency (MHz)	Drawing number
EF6809E-JMG/B*	NFC 96883 - Class G	DIL Cerdip	−55 / +125	1	Data-sheet
EF6809E-CMG/B	NFC 96883 - Class G	DIL side brazed	−55 / +125	1	Data-sheet
EF68A09E-JMG/B	NFC 96883 - Class G	DIL Cerdip	−55 / +125	1.5	Data-sheet
EF68A09E-CMG/B	NFC 96883 - Class G	DIL side brazed	−55 / +125	1.5	Data-sheet

Note : THOMSON COMPOSANTS MILITAIRES ET SPATIAUX.
* On request only.

11.2 - Standard product

Commercial TMS Part-Number (see Note)	Norms	Package	Temperature range T_C (°C)	Frequency (MHz)	Drawing number
EF6809E-CV	TMS standard	DIL side brazed	−40 / +85	1	Data sheet
EF6809E-JV*	TMS standard	Cerdip DIL	−40 / +85	1	Data sheet
EF68A09E-CV	TMS standard	DIL side brazed	−40 / +85	1.5	Data sheet
EF68A09E-JV*	TMS standard	Cerdip DIL	−40 / +85	1.5	Data sheet
EF6809E-JM*	TMS standard	Cerdip DIL	−55 / +125	1	Data sheet
EF6809E-CM	TMS standard	Side brazed DIL	−55 / +125	1	Data sheet
EF68A09E-JM*	TMS standard	Cerdip DIL	−55 / +125	1.5	Data sheet
EF68A09E-CM	TMS standard	Side brazed DIL	−55 / +125	1.5	Data sheet
EF6809E-C	TMS standard	DIL side brazed	0 / +70	1	Data sheet
EF6809E-J*	TMS standard	Cerdip DIL	0 / +70	1	Data sheet
EF68A09E-C	TMS standard	DIL side brazed	0 / +70	1.5	Data sheet
EF68A09E-J*	TMS standard	Cerdip DIL	0 / +70	1.5	Data sheet
EF68B09E-C	TMS standard	DIL side brazed	0 / +70	2	Data sheet
EF68B09E-J*	TMS standard	Cerdip DIL	0 / +70	2	Data sheet

Note : THOMSON COMPOSANTS MILITAIRES ET SPATIAUX.
* On request only.

EF6809E-C M G/B

Type

Packages :
- C = Ceramic DIL
- J = Tin dipped cerdip DIL

Screening:
- — = Standard
- G/B = NFC 96883 Cl.G
- B/B = MIL STD 883 Cl.B Rev B

Temperature / Tcase:
- M = -55°C / +125°C
- V = -40°C / +85°C
- — = 0 / +70°C

This product is manufactured and commercialized by THOMSON COMPOSANTS MILITAIRES ET SPATIAUX - 38521 SAINT-EGREVE / FRANCE.

For further information please contact : THOMSON COMPONENTS AND TUBES CORPORATION - 40G Commerce Way - TOTOWA - NEW JERSEY 07511 / Tel : (201) 812-9000 / Fax : (201) 812-9050.

ORDER CODE : DSEF6809ET/0692 Imprimé en France par Graphic Express - Tél : (1) 46.55.27.24 - 7546 - 06/92