SPECIFICATIONS

PF FBD Connector

AT740 Series
Vertical Press-Fit Type
1.00mm [.039”] Pitch
240 Pos.

Mechanical

Contact Retention Force: *0.66Lbs (0.30kgf) min. per Contact*
Durability: *25 Cycles*
Insertion Force: *15.88kgf max. (Module to connector)*
Unmating Force: *14gf min. per Contact pair*

Electrical

Current Rating: *0.5 AMPS max.*
Insulation Resistance: *1000MW min. at 500V DC*
Dielectric Withstanding Voltage: *500V AC at Sea Level*
Low Level Contact Resistance: *30mW max. initial*

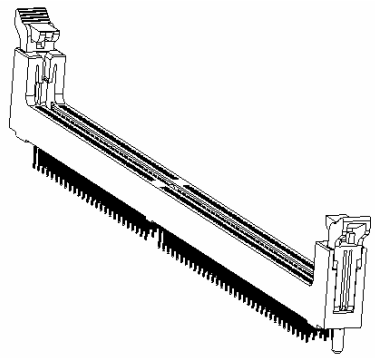

Physical

Housing: *Thermoplastic, UL 94V-0 rated in Black Color*
Contact: *Copper alloy*
Ejector: *Thermoplastic, UL 94V-0 rated in Ivory or Natural Color*
Metal Hold Down: *Copper alloy*
Operating Temperature: *0℃ to +85℃*

DRAWING

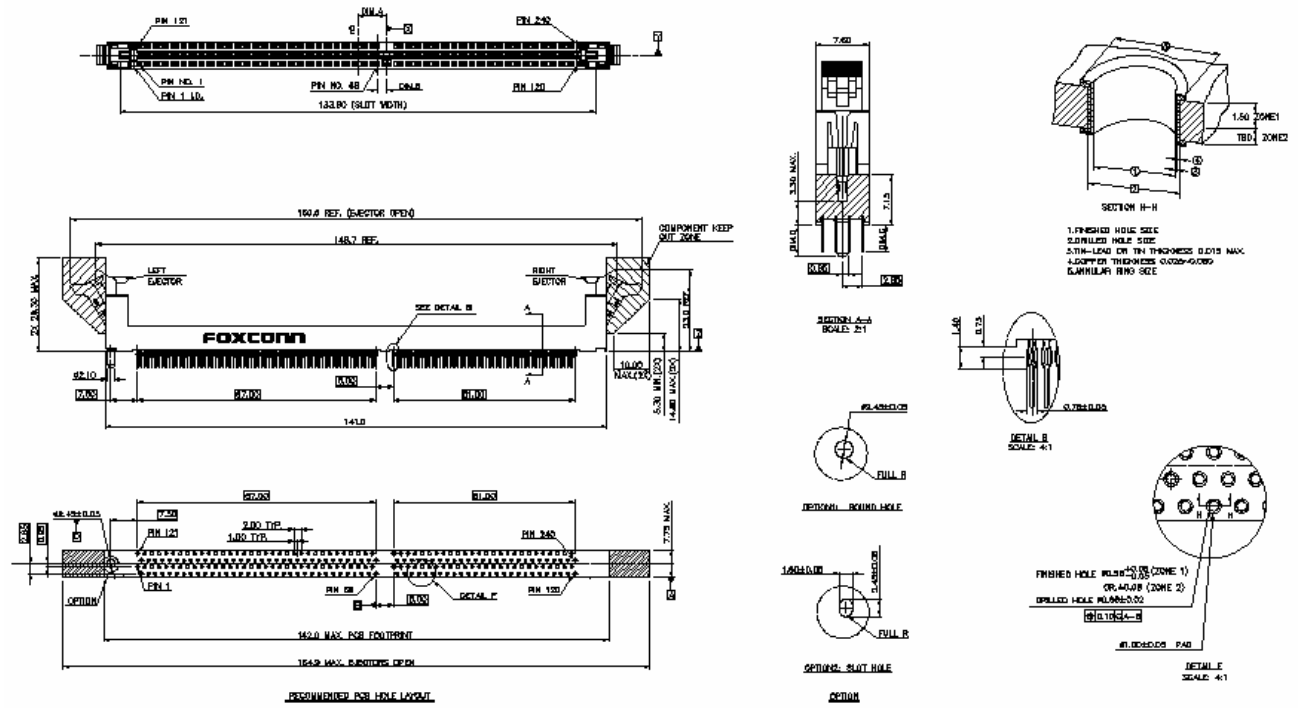

ORDERING INFORMATION

PRODUCT NO. : AT 7 40 * * – **** – **

- MEMORY SOCKET VERTICAL
- FB DIMM PRESS–FIT 1.00 MM PITCH.
- Q’TY OF CONTACTS: 40=240 POSITION
- TAIL LENGTH: 1=3.30 MM (.130”)
- CONTACT AREA GOLD PLATING 1=GOLD FLASH 3=30u” 7=15u”
- EXTENSION CODE
- PLATING TYPE 4N=TIN/LEAD 4F=LEAD FREE RoHS COMPLIANT

PART NUMBER	VOLTAGE MARKING	DIM. A	DIM. B	DIM. C CONTACT TAIL	DIM. D POST
AT7401*–H2B1–**	1.8V	8.00	2.50	3.30±0.25 FOR 1.57 (.062”) PCB THICKNESS	4.30±0.25 FOR 1.57 (.062”) PCB THICKNESS

All specification & dimensions are subject to change, please call your nearest Foxconn sales representative for update information.