10Base-T Filter Module

EPE6047S & EPE6047S-RC

www.DataSheet4U.net

- Designed for use with Seeq 83C95
- General Purpose 10Base-T Filter Module
- Complies with or exceeds IEEE 802.3, 10Base- T Standards
- Add "-RC" after part number for RoHS Compliant
- Available in SMD, DIP & DIL Packages
  Optional Tape and Reel Packaging
- Hipot : 2000 Vrms

Electrical Parameters @ 25° C

Inductance (µH ± 20%)		**Interwinding Capacitance** (pF Max.)	**Leakage Inductance** (µH Max.)		**Et Prodcut** (V-µS Typ.)	**Rise Time** (nS Max..)	**DCR** (Ω Max.)	
@100 KHz, 0.1 Vrms		@100 KHz, 0.1 Vrms	@100 KHz, 0.1 Vrms					
Xmit	Rcv	from Input to Output	Xmit	Rcv			Xmit	Rcv
400	100	10	0.30	0.17	2.0	3.0	0.45	0.30
Pins 1-3	Pins 6-8		Pins 16-14 w/ 1,2,3 shorted	Pins 6-8 w/ 9,10,11 shorted			Pins 1-3	Pins 6-8, 11-9, 16-14

• **Isolation** : meets or exceeds 802.3 IEEE Requirements •

Package

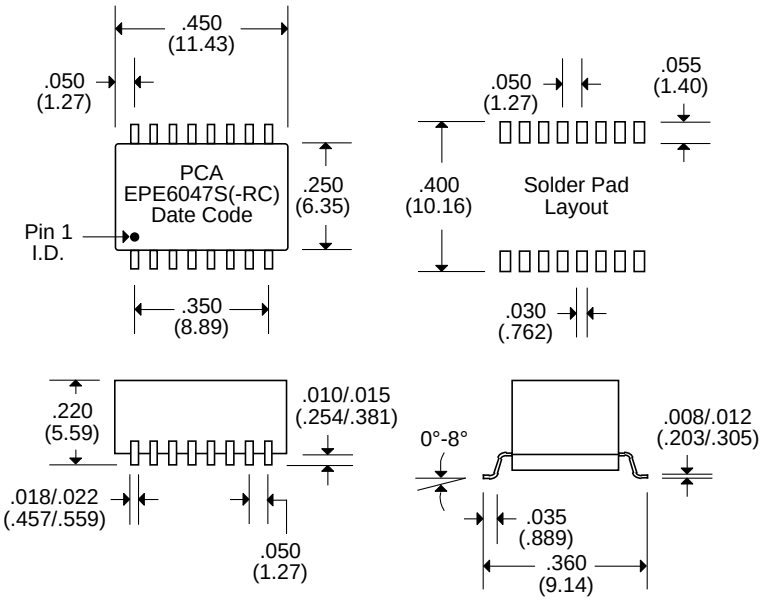

Schematic

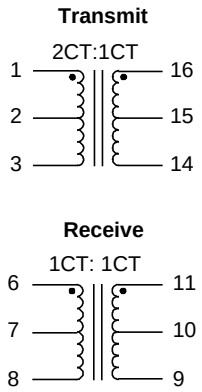

Notes :	**EPE6047S**	**EPE6047S-RC**
1. Lead Finish	SnPb	Hot Tin Dip (Sn) †
2. Peak Temperature Rating	225°C	245°C
3. Moisture Sensitive Levels	MSL = 3 (168 Hours, ≤30°C/60%RH)	MSL = 4 (72 Hours, ≤30°C/60%RH)
4. Weight	1.02 grams	1.02 grams
5. Packaging Information (Tube) (*Add "TR" to end of part number, but in front of "-RC"when placing order)	TBD pieces/tube	TBD pieces/tube
(Tape & Reel)	TBD pieces/13" reel (*EPE6047STR)	TBD pieces/13" reel (*EPE6047STR-RC)

† Lead Material : Matte Tin with Ni Barrier

Unless Otherwise Specified Dimensions are in Inches /mm ± .010 /.25

PCA ELECTRONICS, INC.
16799 SCHOENBORN ST.
NORTH HILLS, CA 91343

Product performance is limited to specified parameters. Data is subject to change without prior notice.

TEL: (818) 892-0761
FAX: (818) 894-5791
http://www.pca.com