samtec

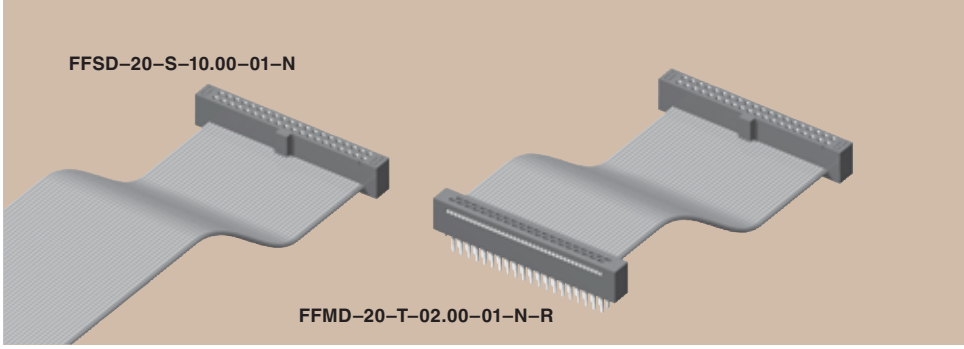

.050" (1,27mm) CABLE STRIPS FFSD, FFMD SERIES

FFSD Mates with:
FTS, FTSH, EHF, SHF, ESHF

SPECIFICATIONS

For complete specifications see www.samtec.com?FFSD

FFSD

FILE NO. E111594

Insulator Material:
PBT
Contact:
BeCu
Plating:
10µ" (0,25µm) Au over 50µ" (1,27µm) Ni on contact area; Sn over 50µ' (1,27µm) Ni on balance
Wire:
30 AWG
Current Rating:
0.5A
Operating Temp Range:
-40°C to +105°C
Lead Size Accepted:
(0,41mm) .016" SQ
Contact Resistance:
10 mΩ maximum
Insertion Depth:
(2,64mm) .104" to (3,17mm) .125"
Insertion Force:
(Single contact only) 5oz (1,39N) avg.
Withdrawal Force:
(Single contact only) 3oz (0,83N) avg.
RoHS Compliant:
Yes

Note: This Series is non-standard, non-returnable.

Mates with:
FLE, SFMC

SPECIFICATIONS

For complete specifications see www.samtec.com?FFMD

FFMD

FILE NO. E111594

Insulator Material:
Black Glass Filled Polyester
Terminal:
BeCu
Plating:
Sn over 50µ" (1,27µm) Ni
Wire:
30 AWG
Current Rating:
0.5A
Operating Temp Range:
-40°C to +105°C
RoHS Compliant:
Yes

Note: This Series is non-standard, non-returnable.

TYPE STRIP – NO. PINS PER ROW – END OPTION – OVERALL LENGTH – 01 – OPTION – OTHER OPTION

–05, –08 –10, –13, –17, –20, –25
(Call for other sizes)

–"XX.XX"
= Assembled Length

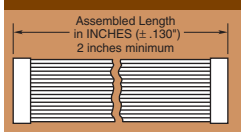

–N
= Notch Polarization (FFSD only)

–S = Single End

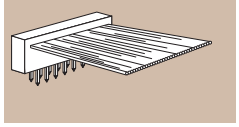

–D = Double End

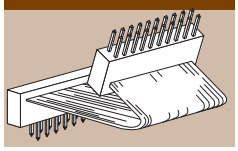

–T = Transfer End (FFMD only)

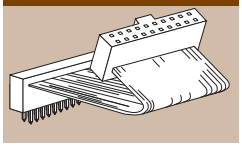

Leave blank for –S and –D End Options. For –T End Option Specify "–N" (Socket has notch polarization) (FFMD only)

–RW = Reverse Wiring

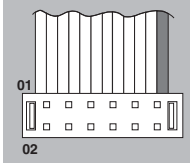

Blue or black wire opposite position #1.
1

–D "XX" = Daisy Chain

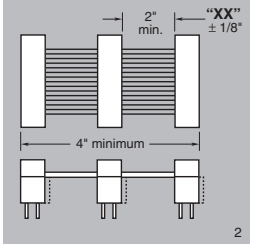

2

–R = Reverse

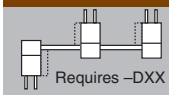

Requires –DXX
3

–M = Middle Reverse

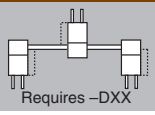

Requires –DXX
3

–O = Outside Reverse

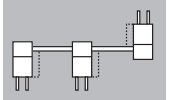

Requires –DXX
3

–SR = Strain Relief

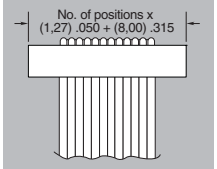

Not available with –S, –O, –M, –R or –DXX

FFSD = Socket Strip

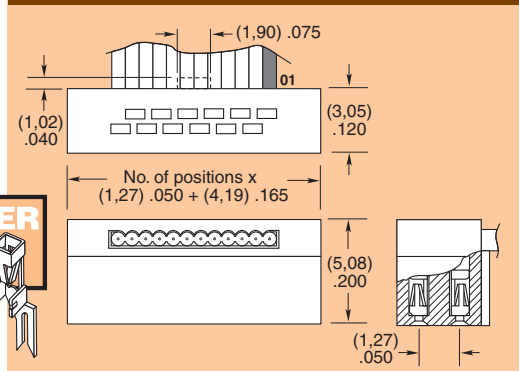

FFMD = Terminal Strip

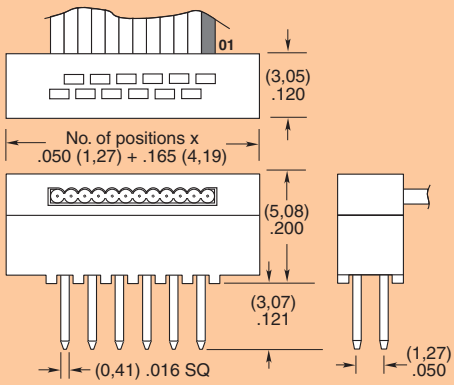

Due to technical progress, all designs, specifications and components are subject to change without notice.

SAMTEC USA • Tel: 1-800-SAMTEC-9 or 812-944-6733 • Fax: 812-948-5047 **SAMTEC SILICON VALLEY** • Tel: 408-395-5900 • Fax: 408-395-1520 **SAMTEC UK** • Tel: 01236 739292 • Fax: 01236 727113
SAMTEC GERMANY • Tel: +49 (0) 89 / 89460-0 • Fax: +49 (0) 89 / 89460-299 **SAMTEC FRANCE** • Tel: 01 60 95 06 60 • Fax: 01 60 95 06 61 **SAMTEC ITALY** • Tel: 39 039 6890337 • Fax: 39 039 6890315
SAMTEC NORDIC/BALTIC • Tel: +46-84477280 • Fax: +46-87420413 **SAMTEC ISRAEL** • Tel: 972-3-7526600 • Fax: 972-3-7526690 **SAMTEC INDIA** • Tel: +91-80-3272 1612 • Fax: +91-80-4152 8187
SAMTEC ASIA PACIFIC • Tel: 65 6745-5955 • Fax: 65 6841-1502 **SAMTEC JAPAN** • Tel: 045-475-1385 • Fax: 045-475-1340 **SAMTEC CHINA** • Tel: 86-21-61103766 • Fax: 86-21-5423 4575 **SAMTEC TAIWAN** • Tel: 886-2-2735-6109 • Fax: 886-2-2735-5036
SAMTEC HONG KONG • Tel: 852-26904858 • Fax: 852-26904842 **SAMTEC KOREA** • Tel: 82-31-717-5685 • Fax: 82-31-717-5681 **SAMTEC SOUTH AFRICA** • Tel: 27 11 452 8112 • Fax: 27 86 6714432 **SAMTEC ANZ** • Tel: 613 9512 7747 • Fax: 613 9512 7745