S5L2

SWITCH
SINGLE-POLE, FIVE-THROW
ABSORPTIVE

Frequency Range (min)	1 – 4	GHz
Insertion Loss (max)	1.6	dB
VSWR (max)	1.6	ratio
Isolation (min)	85	dB
Switching speed (max)	100	nsec
CW RF power, operating (max)	1	W

NOTES:

DC Bias: (Standard) +5V +/-0.5V @ 200mA max
-15V +/-3V @ 50mA max

DC Bias: (-5 option) +5V +/-0.5V @ 250mA max
-5V +/-0.5V @ 60mA max

DC Bias: (-12 option) +15V +/-3V @ 200mA max
-15V +/-3V @ 50mA max

Control: (Standard) TTL 0 = Low Loss
TTL 1 = Isolation

E1 controls J2 – J1
E2 controls J3 – J1
E3 controls J4 – J1
E4 controls J5 – J1
E5 controls J6 – J1

Absorptive switch: Internal 50Ω terminations at J2, J3, J4, J5 and J6 (in isolation mode).

Switching speed is defined as 50%TTL to 90% (t-on) and 50%TTL to 10%RF (t-off).

MECHANICAL SPECIFICATIONS:

Case Style: S5 Outline (Standard logic)
S5-3 Outline (Three-bit logic)
Finish: Gold plate per MIL-G-45204
Connectors: SMA Female per MIL-C-39012
Bias & Control Pins: ø0.02" x 0.15" long
Weight: 60g max
Mounting: ø0.10" through holes (2) places

Three-bit control:
(-3 option)

E3	E2	E1	Low loss path
0	0	0	J2 – J1
0	0	1	J3 – J1
0	1	0	J4 – J1
0	1	1	J5 – J1
1	0	0	J6 – J1
1	0	1	All off
1	1	0	All off
1	1	1	All off

ENVIRONMENTAL SPECIFICATIONS:

MIL-E-5400, MIL-STD-202, MIL-E-16400
Operating Temp: -55°C to +85°C
Storage Temp: -65°C to +125°C
Humidity: MIL-STD-202F, M103, Cond B
Shock: MIL-STD-202F, M213, Cond B
Altitude: MIL-STD-202F, M105, Cond B
Vibration : MIL-STD-202F, M204, Cond B
Thermal Shock: MIL-STD-202F, M107, Cond A
Temperature Cycle: MIL-STD-202F, M105C, Cond D

SCREENING:

Internal Visual per MIL-STD-883, Method 2017
Temperature Cycle: -65°C to +100°C, 10 cycles

Hermetically-sealed switches are fine and gross leak checked per MIL-STD-883, Method 1014.

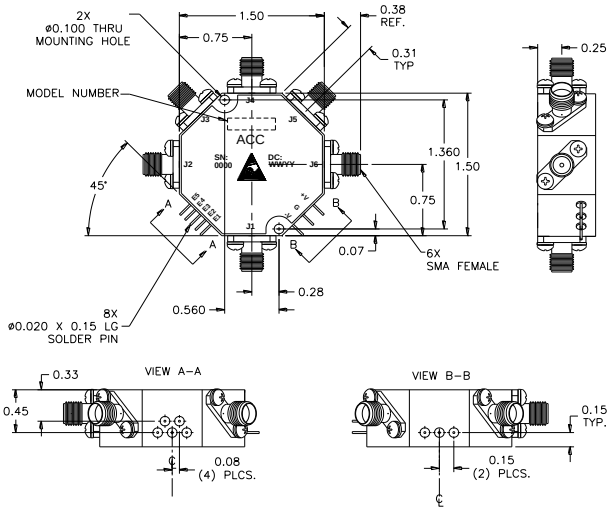

OUTLINE CASE STYLE S5

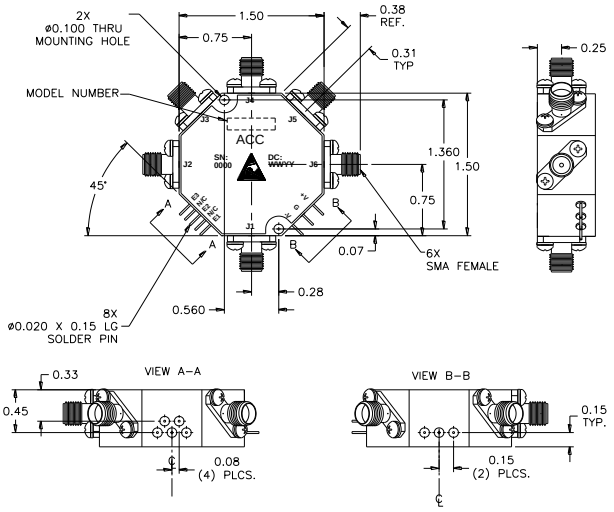

OUTLINE CASE STYLE S5-3

PART NUMBER ORDERING INFORMATION:

- Add "-RC" suffix: RoHS-compliant
- Add "-5" suffix: +/-5V DC supplies
- Add "-5-RC" suffix: +/-5V DC supplies, RoHS-compliant
- Add "-12" suffix: +/-12V to 18V DC supplies
- Add "-12-RC" suffix: +/-12V to 18V DC supplies, RoHS-compliant
- Add "-3": Three-bit logic control
- Add "-3-RC": Three-bit logic control, RoHS-compliant
- Add "-3-5" suffix: Three-bit logic control, +/-5V DC supplies
- Add "-3-5-RC" suffix: Three-bit logic control, +/-5V DC supplies, RoHS-compliant
- Add "-3-12" suffix: Three-bit logic control, +/-12V to 18V DC supplies ECL logic input
- Add "-3-12-RC" suffix: Three-bit logic control, +/-12V to 18V DC supplies, RoHS-compliant
- Add "-H" suffix: Hermetic seal (does not apply to RoHS-compliant models)

611 Industrial Way West, Eatontown, NJ 07724 tel: 732-460-0212 fax: 732-460-0214 sales@advanced-control.com www.advanced-control.com