VF960/VF961

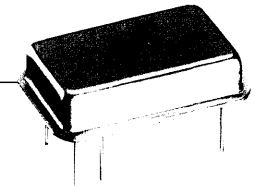

ECL/PECL Compatible Hybrid VCXO
Standard 14 Pin DIP Package

FEATURES

- No Frequency Multiplication is Used
- Very Low Phase Jitter
- Low Component Count
- Pullability (±500 ppm available)
- Temperature Range (–40°C to +85°C) Available
- Complementary Output Available
- Wide Frequency Range

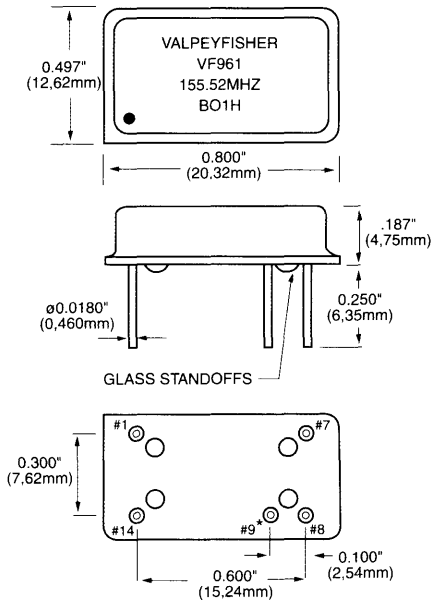

All dimensions are typical unless otherwise specified.
* Pin 9 optional

Creating a Part Number

VF960/961 [ ][ ][ ] - [ ][ ][ ] - [ ] - **FREQ.**

FREQUENCY STABILITY

Code	Specification
S	±20 ppm
	±25 ppm (std.)

DUTY CYCLE

Code	Specification
H	±5%
	±10% (std.)

INPUT VOLTAGE

Code	Specification
L	3.3 Volt ±5%*
	5.0 Volt ±5% (std.)

(*VF961 Only)

OPERATIONAL TEMP. RANGE

Code	Specification
	0°C to +70°C (std.)
1	-40°C to +85°C

OUTPUT

Code	Specification
C	Complementary
	4 pin pkg Single (std.)

LEAD CONFIGURATION

Code	Specification
G	Gull Wing
	Through Hole (std.)

ABSOLUTE PULL RANGE (ppm)

Code	Specification
	±50 ppm MIN. (std.)
XXX	up to 500 ppm

(customer specified)

Example: VF960SHL-1CG-100-106.25MHz: Frequency Stability ±20ppm, Duty Cycle ±5%, Input Voltage 3.3 Volt ±5%, Operating Temperature -40°C to +85°C, Complementary Output (5-pin package), Gull Wing, APR ±100ppm, Frequency 106.25MHz.

	Parameter	Symb	Condition	Min	Typ	Max	Unit	Note
Absolute Max. Ratings	Input Break Down Voltage	Vcc–Vee		–.5		7.0	V	
	Storage Temp.	Ts		–40		+85	°C	
	Control Voltage	Vc		–1.0		9.0	V	
Electrical	Frequency Range	F		10		200	MHz	
	Frequency Stability	ΔF/F	Over Temp, Vcc			±25	ppm	
	Input Voltage	Vcc Vee Vcc	PECL ECL LVPECL	4.75 –4.95 3.15	5.00 –5.20 3.30	5.25 –5.45 3.45		VF961 VF960 VF961L
	Input Current	Icc/Iee	50 Ohm Load			65	mA	
	Load	50 Ohm to Vcc–2V or Thevenin Equiv. Bias required						
	Duty Cycle		@50%	40	50	60	%	1
	Rise/Fall Time	Tr/Tf	20% to 80%			1.5	ns	
	Logic "1" Level	Voh	@Vcc = 5.0V @Vee = –5.2V @Vcc = 3.3V	4.04 –0.96 2.59		4.19 –0.81 2.74	V	PECL ECL LVPECL
	Logic "0" Level	Vol	@Vcc = 5.0V @Vee = –5.2V @Vcc = 3.3V	3.15 –1.85 1.45		3.25 –1.65 1.55	V	PECL ECL LVPECL
	Start–up Time	Ts			2	10	ms	
	Phase Jitter		1σ			1	ps	fj>1KHz
	Modulation BW	fm	@ Vc = 2.5V	10			KHz	@–3db
	Input Impedance		fm<10KHz	50			KOhm	
	Control Voltage	Vc	PECL ECL LVPECL	0.0 –5.0 0.0		5.0 0.0 3.3	V	2
	Absolute Pull Range	APR	Overall	±50			ppm	3
	Deviation Slope		Monotonic, pos. Monotonic, neg. Monotonic, pos.		50 –50 75		ppm/V	PECL ECL LVPECL
	Linearity					±20	%	4
	Setability (Vc for center freq)	Vc0	@25°C, Fnominal	2.00 –2.00 1.25	2.50 –2.50 1.65	3.00 –3.00 2.05	V	PECL ECL LVPECL

Environmental and Mechanical	Operating Temperature Range	0°C to +70°C (–40°C to +85°C available)
	Mechanical Shock	Per MIL–STD–202, Method 213, Cond. E
	Thermal Shock	Per MIL–STD–883, Method 1011, Cond. A
	Vibration	Per MIL–STD–883, Method 2007, Cond. A
	Soldering Conditions	260°C, for 10s, Max.
	Hermetic Seal	Leak rate less than 5 x 10^{-8} atm.cc/s of helium
Electrical Connections	Pin Out	Pin #1–Voltage Control; Pin #7–Ground, Case (PECL)/–Vee(ECL); Pin #8–Output; Pin #14–Vcc (PECL)/Case,Ground (ECL); Pin #9–Complementary Output (Optional)

Notes:
1. Tighter duty cycle available.
2. 0V to 5V control voltage available for Vcc 3.3V. Nominal control voltage is 2.5V and setability is ±0.5V in this case.
3. Wider pullability available.
4. 10% and 5% available.

ValpeyFisher 75 South Street, Hopkinton, MA 01748 800-982-5737 508-435-6831 Fax: 508-435-5289 www.valpeyfisher.com