FOXCONN®

SPECIFICATIONS

SAS Connector

LD Series
Hybrid Type
Receptacle
1.27mm [.050"] Pitch
29 Pos.

Mechanical

Insertion Force: *20N max.*
Withdrawal Force: *4N min.*
Durability: *500 Cycles.*

Electrical

Voltage Rating: *250V.*
Current Rating: *1.5A per pin.*
Contact Resistance: *30 mΩ max. Δ15 mΩ max. after stress.*
Dielectric Withstanding Voltage: *500V AC.*
Insulation Resistance: *1000MΩ min.*

Physical

Housing: *Thermoplastic, UL 94V-0 rated in Pink Color.*
Contact: *Copper alloy*
Plating: *See "ORDERING INFORMATION"*
Operating Temperature: *-55℃ to +105℃*

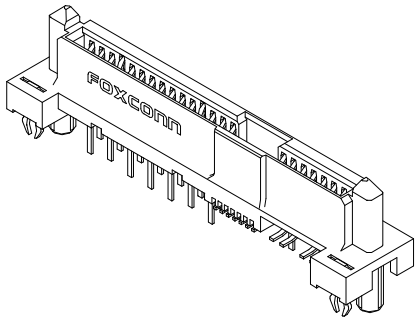

DRAWING

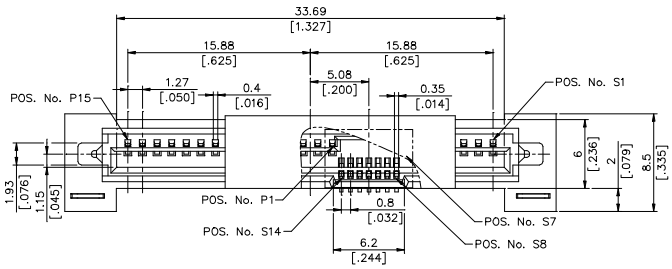

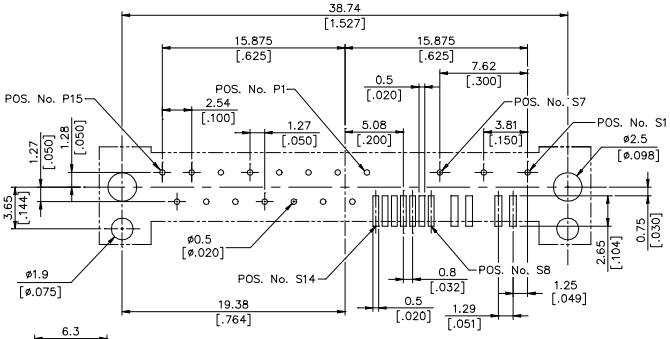

RECOMMENDED P.C.B. LAYOUT

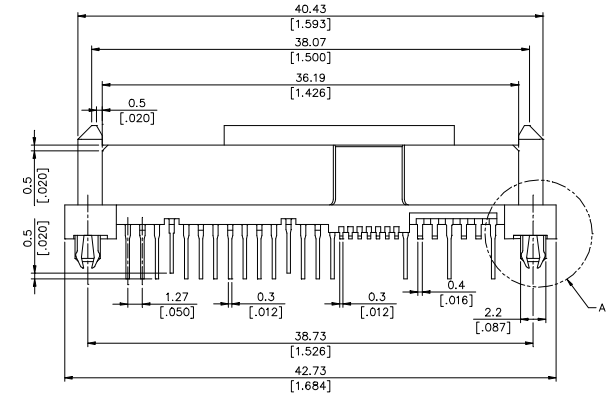

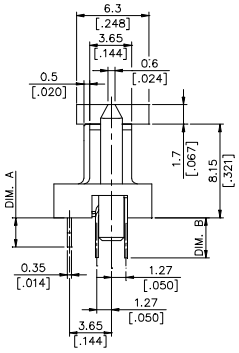

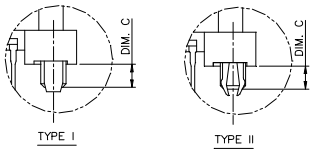

DETAIL A

ORDERING INFORMATION

PRODUCT NO. : LD 2 3 29 * - A 0 * * * *

- S-ATA Series
- Mating End Type
  2=Receptacle
- Mounting End Type
  3=Hybrid
- No. of Pos.
  29=29 Pos.
- Contact Area Plating
  F=Gold Flash With RoHS Compliance
  V=15u" Gold With RoHS Compliance
  H=30u" Gold With RoHS Compliance
- S-ATA Specification
  A=SAS
- Outer Shape
  0=Standard Type
- Modification Code
  See Figture A
- Housing Material
  Material Code
- Package Type
  See Figure A
- Tail Length
  See Figure A

P/N	DIM. A	DIM. B	DIM. C	Cover	Package	Board Lock
LD2329*-A0791A	4.08[.161]	4.08[.161]	4.08[.161]	Without	Tray	TYPE II
LD2329*-A0691A	4.08[.161]	4.08[.161]	3.70[.146]	With	Tape&Reel	TYPE I
LD2329*-A059	2.55[.100]	3.49[.138]	2.00[.079]	Without	Tray	TYPE II
LD2329*-A04	2.40[.095]	3.49[.138]	2.00[.079]	With	Tape&Reel	TYPE I
LD2329*-A01	2.40[.095]	3.49[.138]	2.00[.079]	Without	Tray	TYPE I

Figture A

All specification & dimensions are subject to change, please call your nearest Foxconn sales representative for update information.