SILONEX inc

NPN SILICON PLANAR EPITAXIAL PHOTOTRANSISTORS

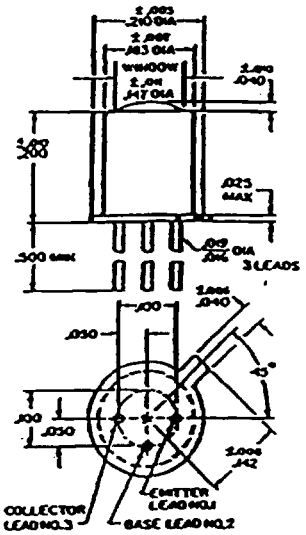

General Description

The SLT-50L series of silicon planar epitaxial phototransistors is available in a hermetically sealed TO-18 package. The high profile lensed cap allows an acceptance half angle of 10° measured from the optical axis to the half power point. These units offer high power dissipation with a full range of high current sensitivity for low illumination levels. Spectrally matched to Silonex infrared emitting diodes.

ABSOLUTE MAXIMUM RATINGS (T_A=25°C unless otherwise noted)

- Collector-Emitter Voltage . . . . . 40 Volts
- Emitter-Collector Voltage . . . . . 7.5 Volts
- Collector-Base Voltage. . . . . 60 Volts
- Storage Temperature Range . . . . . -65°C to +150°C
- Operating Temperature Range . . . . . -55°C to +125°C
- Lead Soldering Temp.(5 sec, 1/16" from case) . . . . . 240°C
- Power Dissipation . . . . . 250 mW
- Derate linearly above 25°C . . . . . 2 mW/°C

ELECTRICAL CHARACTERISTICS @ 25°C

			SLT50L1		SLT50L2		SLT50L3		SLT50L4		SLT50L5		SLT50L6		
SYMBOL	CHARACTERISTICS	TEST CONDITIONS	MIN	MAX	MIN	MAX	MIN	MAX	MIN	MAX	MIN	MAX	MIN	MAX	UNITS
$I_L(I_{CEO})$	Collector Light Current	V_{CE}=5V, H*=5mW/cm²	0.6		1.2		2.4		4.0		6.0		12.0		mA
$I_D(I_{CEO})$	Collector Dark Current	V_{CE}=10V, H=0		25		25		25		40		40		40	nA
BV_{CEO}	Collector to Emitter Breakdown Voltage	I_C= 100µA	40		40		40		40		40		40		Volts
BV_{CBO}	Collector to Base Breakdown Voltage	I_C= 100µA	60		60		60		60		60		60		Volts
BV_{EBO}	Emitter to Collector Breakdown Voltage	I_C= 100µA	7.5		7.5		7.5		7.5		7.5		7.5		Volts
V_{CE}(SAT)	Collector to Emitter Saturation Voltage	I_C=10mA, I_B=0.5mA H=0		0.3		0.3		0.3		0.3		0.3		0.3	Volts
tr	Rise time	**R_L=100Ω, I_L=0.8mA	3 TYP		3 TYP		3 TYP		3 TYP		3 TYP		3 TYP		µSec
tf	Fall time	V_{CC}=+5.0 Volts	3 TYP		3 TYP		3 TYP		3 TYP		3 TYP		3 TYP		µSec

*The light source is a frosted Tungsten Incandescent Lamp @ 2870°K
**The light source is a gallium arsenide LED with a rise time less than 300 ns

SILOS013