REVISIONS		
ISS	ZONE	DESCRIPTION\PER REQUEST\DATE

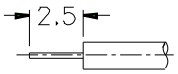

RECOMMENDED
CABLE STRIPPING DIM'S

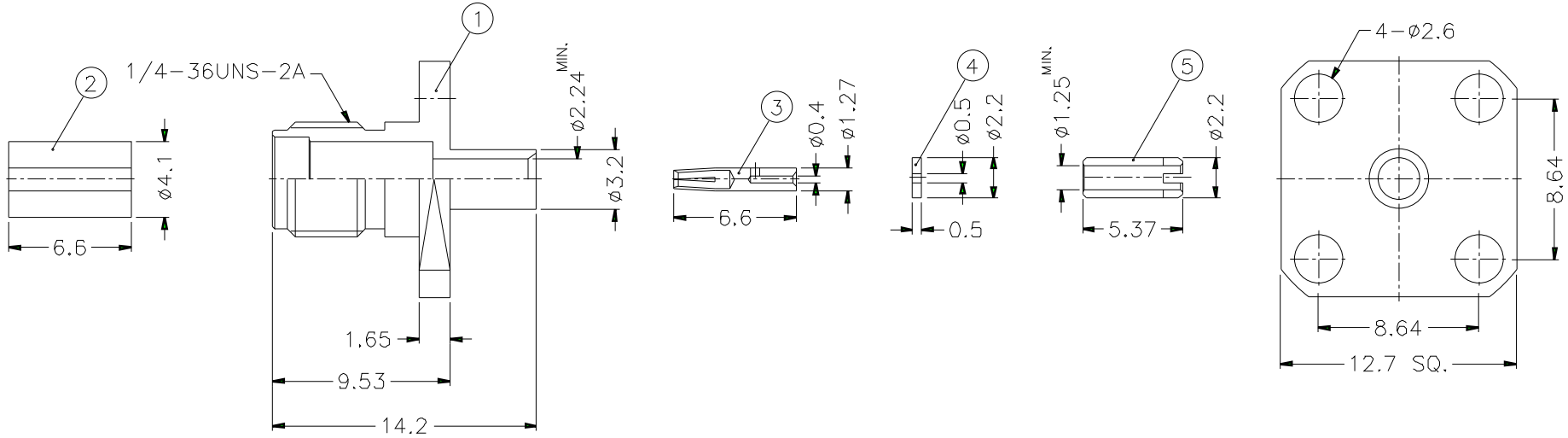

NOTES: FINISH (PLATING THICKNESS IN MICRO-INCHES)
1. BRASS PER QQ-B-626
2. GOLD PL. 3 MIN. THICK OVER NICKEL PL. 100 MIN. THICK OVER COPPER STRIKE
3. BERYLLIUM COPPER PER QQ-C-530
4. GOLD PL. 50 MIN. THICK OVER NICKEL PL. 100 MIN. THICK OVER COPPER STRIKE
5. TEFLON MIL-P-19468

1. CONTACT PIN TO SOLDER

NO.	DESCRIPTION	MATERIAL	FINISH	Q'TY	DRAWING NO.
5	SOLDER BARREL	NOTE 1	NOTE 2	1	SB-047X537
4	INSULATOR	NOTE 5	NATURAL	1	SMA1181A2-5T-50
3	CONTACT PIN	NOTE 3	NOTE 4	1	SMA7081-3-127/04-B
2	INSULATOR	NOTE 5	NATURAL	1	SMA7081-2T-50
1	BODY	NOTE 1	NOTE 2	1	SMA7581-1-32/224-C

DIMENSIONS ARE IN MILLIMETERS

UNLESS OTHERWISE SPECIFIED TOLERANCES
0.5-6 = ±0.2
6-30 = ±0.4
30-120 = ±0.6
120-315 = ±1
315-1000 = ±1 6
1000-2000 = ±2 4

SCALE 3/1 | ISSUE A

PART NO. SMA6581A3-3GT50G-13-50

APPROVED DATE 10-11-01'

CHECKED DATE 10-11-01'

DRAWN DATE 10-11-01'

FILE NO.

Amphenol

TITLE
SMA SEMI-RIGID PANEL JACK

DRAWING NO.
KJ-SMA6581A3-3GT50G-.047-50

ITEM NO.