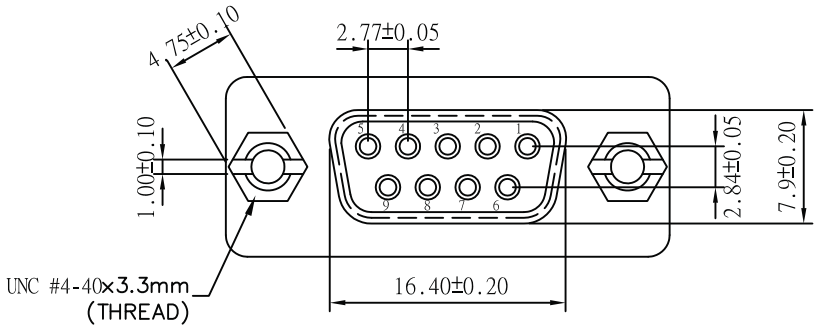

UNC #4-40 Hexscrew

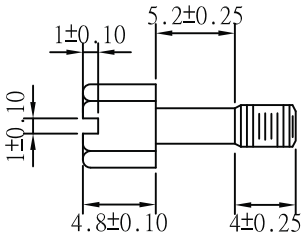

UNC #4-40 Hexnut

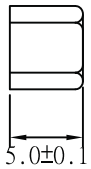

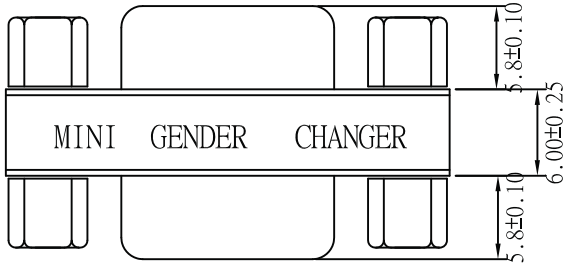

Pin Out

9P-Female	9P-Female
1	1
2	2
8	8
9	9
G	G

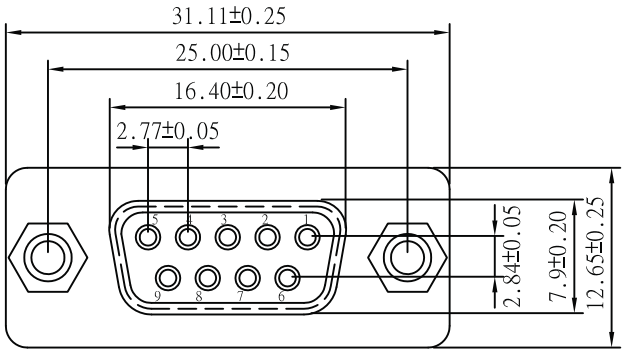

Material:

- Insulator: PBT Glass fibre reinforced UL 94 V0
- Contact: Brass
- Contact plating: Gold plated over nickel
- Shell: Tin plated shell
- Yellow label with black characters

Unit: MM

Scale	1:1						Name
TOLERANCE							
X.X	±0.40			Drawn	11.22.11		Chappell
X.XX	±0.25			Approved			
X.XXX	±0.15						
Angle	±3°						
			Modification	Date	Name		

Item No.

AB411-R

Title

Mini Gender Changer -
D-Sub 9 Pin Female <=> D-Sub 9 Pin Female

Drawing No.

rev00

Replace

Sheet

RoHS Complaint

ASSMANN WSW components