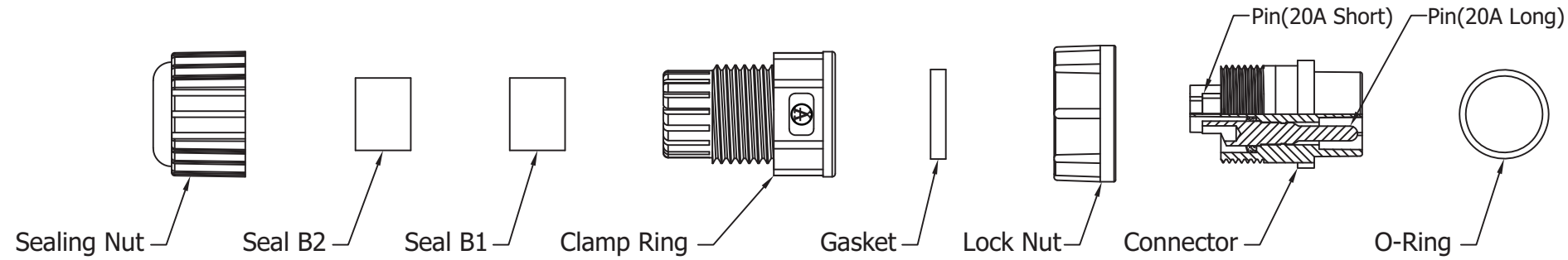

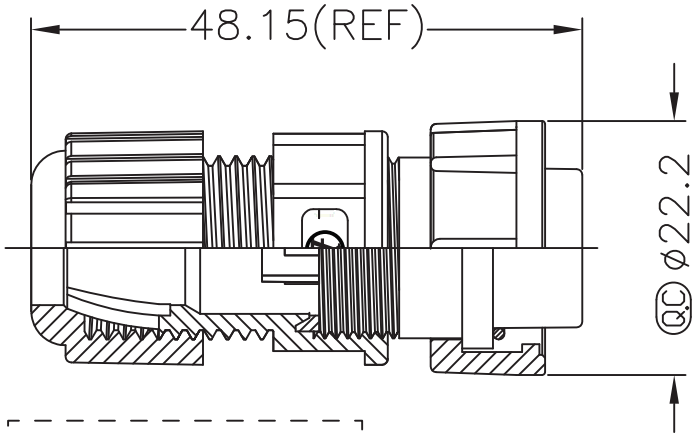

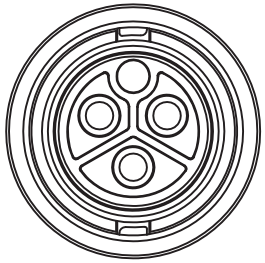

Connector

Material:

- Waterproof Rate: IP67
- Housing: Nylon+GF, Black
- Female Pin: Copper Alloy, Gold Plated
- O-Ring: Silicon, Gray
- Lock Nut: Nylon+GF, Black
- Gasket: Silicon, Gray
- Clamp Ring: PPO, Black
- Sealing Nut: Nylon+GF, Black
- Seal B1 for cable: OD: Ø7.6MM~9.6MM
- Seal B2 for cable: OD: Ø4.0MM~7.6MM
- One set unassemabled in one PE bag

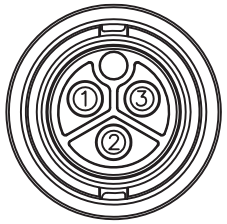

Pin Assignments
Front View

Unit: MM±0.25MM

Scale	1:1
TOLERANCE	
X.X	±0.40
X.XX	±0.25
X.XXX	±0.15
Angle	±3°

Modification	Date	Name

		Name
Drawn	12.02.11	Chappell
Approved		

Item No.
A-P03BFMA-LL7-1-R

Title
Waterproof Power Connector Locking Assembly, 3 Pin Male, 20 Amps

Drawing No.

rev00

Replace

Sheet

ASSMANN WSW components

RoHS Complaint