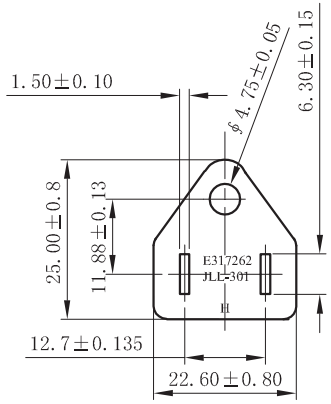

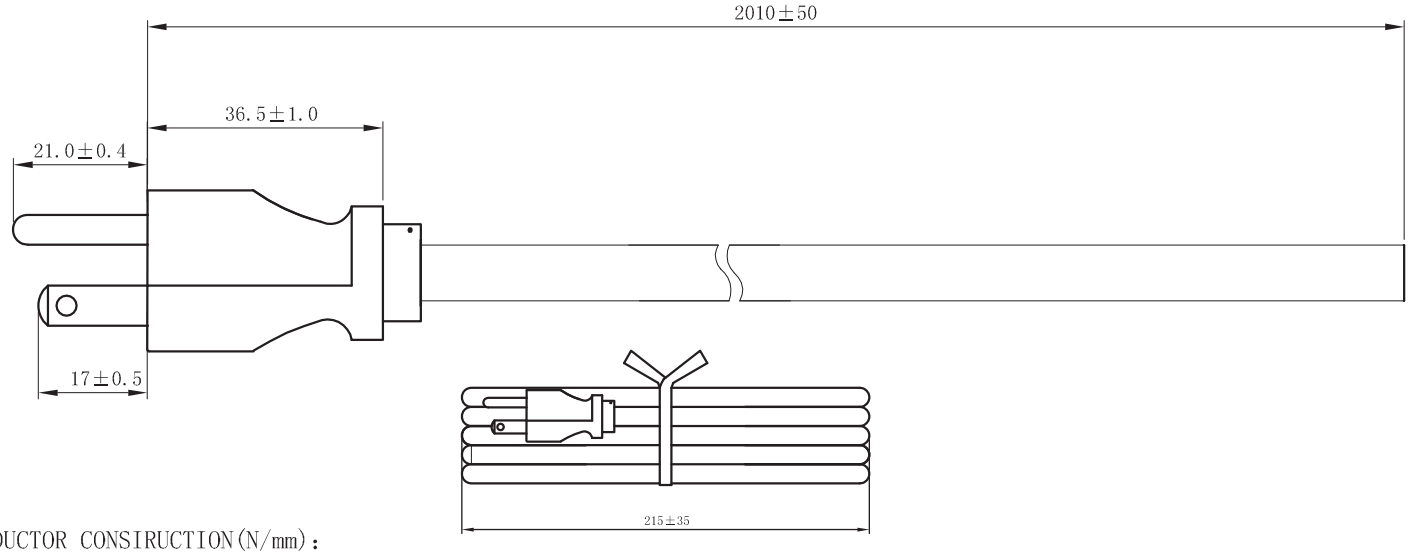

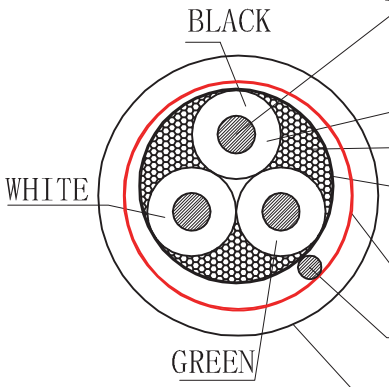

CONDUCTOR CONSIRUCTION(N/mm):
41/0.16AS

PVC INSULATION AVERAGE
THICKNESS: 0.76mm
ID:2.80±0.1mm

Fill

Wrapping

Aluminum/Mylar(Conducting face
drainage wire)

Drain wire
16/0.16TXR

PVC JACKET AVERAGE
THICKNESS: 0.76mm
OD:8.80±0.15mm

Material:

- E243711(UL) SJT 3 x 18AWG(0.824MM²)
  Shielded, 105°C 300V VW-1
  - CSA 228191
- Jacket Color: Black
- E-Green, L-Black, N-White

Electrical:

- 100% Open & Short Testing
- Insulation Resistance: 100MΩ (Min.)
- Voltage: 500V DC / 1 Min.

Unit: MM

RoHS Complaint

Scale	1:1							Name
TOLERANCE						Drawn	12.27.11	Chappell
X.X	±0.40					Approved		
X.XX	±0.25							
X.XXX	±0.15							
Angle	±3°							
			Modification	Date	Name			

ASSMANN WSW components

Item No.
AK500-OE-8-2-R

Title: Power Cord - SJT/Open End, Shielded, 105°C,18AWG, 2 Meters

Drawing No.

rev00

Replace

Sheet