Rev	AWO #	Description	Date	Appr
-		RELEASED	11/05/10	

APPROVED: _____

DATE: _____ TITLE: _____

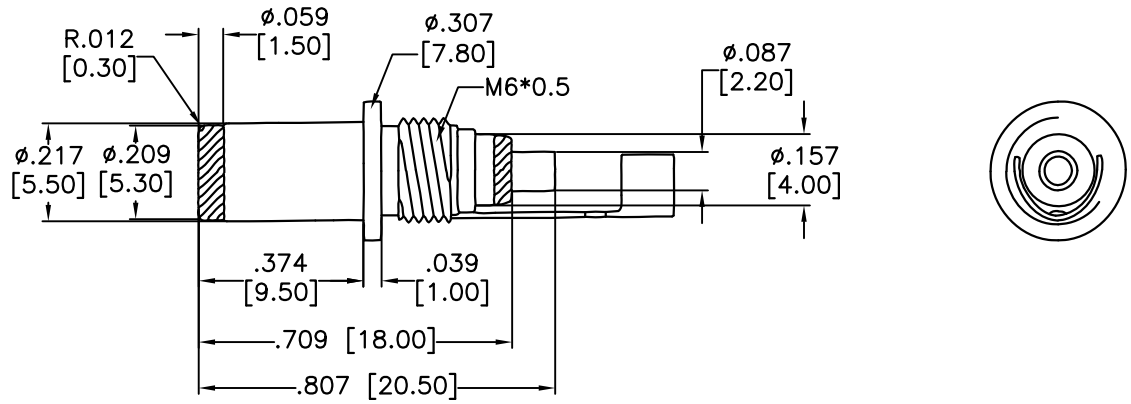

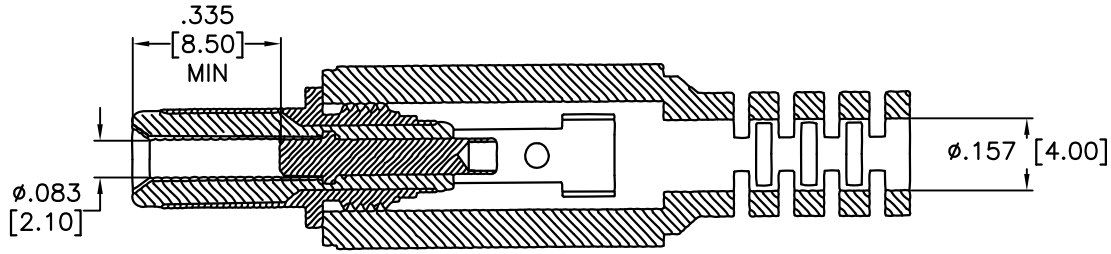

SPECIFICATIONS:

Material:

Hosing: ABS, Color Black

Insulator Ring: POM, Color Black

Outer Sleeve: Brass, Nickel plated

Inner Barrel: Brass, Nickel plated

Ground Terminal: Brasss, Nickel plated

Electrical:

Contact Resistance: 30 mohms max

Insulation Resistance: 100 mohms min @ dc 500V

Dielectric Withstanding Voltage: AC 500V for 1 minute.

Environmental:

Lead free, RoHS compliant. RoHS COMPLIANT

UNLESS OTHERWISE SPECIFIED
ALL DIMENSIONS ARE INCHES [MM]
TOLERANCES: EXCEPT AS NOTED

INCHES		HOLES	
.X	± .10	Ø.X	±.10
.XX	± .020	Ø.XX	±.015
.XXX	± .015	Ø.XXX	±.010

APPROVALS		DATE
DRAWN	DY	11/05/10
CHECKED		
APPROVED		

ADAM TECH
909 Rahway Avenue, Union, NJ 07083
Phone: 908-687-5000 Fax: 908-687-5710

TITLE: 2.1mm DC PLUG

SIZE	PART NO.	REV.
X	ADP-.082/.216/.374-SR	-

REF: S00025C | SCALE: NTS | SHEET 1 OF 1