Rev	AWO #	Description	Date	Appr
-		RELEASED	2/9/06	
A		REDRAWN	9/15/06	

APPROVED: _____

DATE: _____ TITLE: _____

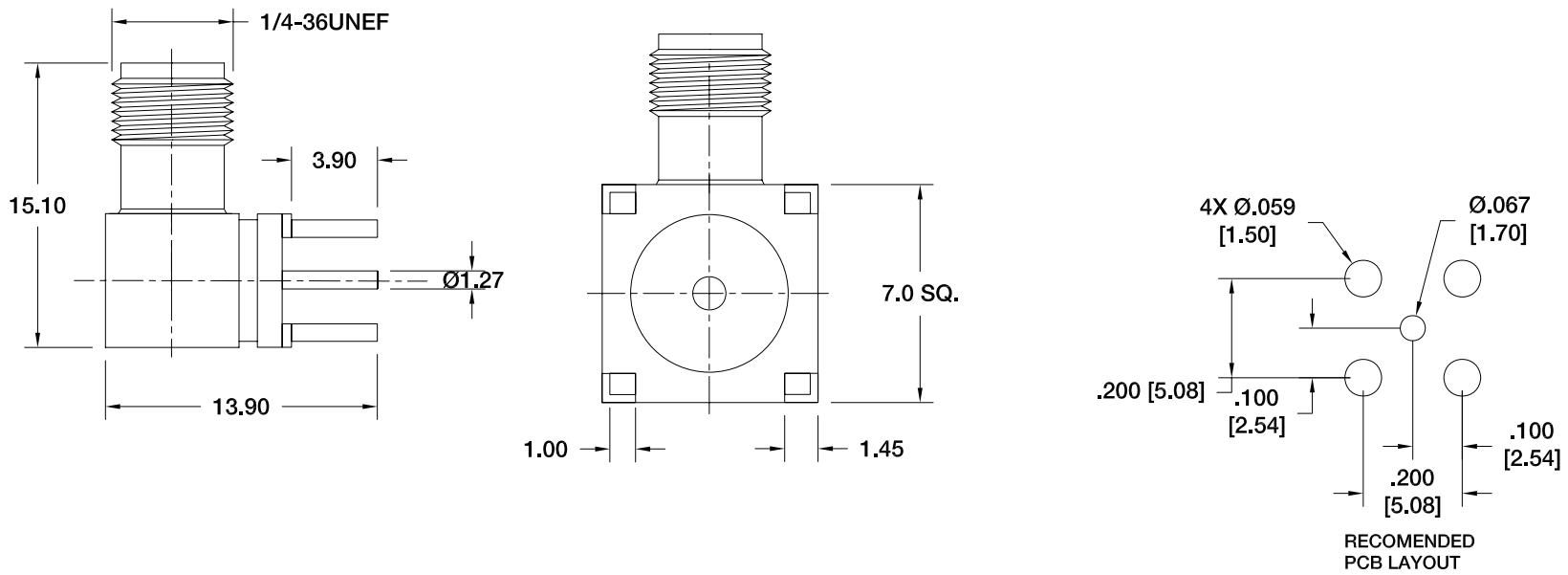

DESCRIPTION	MATERIAL	QTY	FINISH
INSULATOR	TEFLON	1	NONE
PIN	BRASS	1	GOLD
BODY	BRASS	1	GOLD

SPECIFICATIONS:
MATERIAL:
Housing: Brass, nickel or gold plated per requirement
Insulator: Teflon
Contacts: Beryllium Copper, gold-plated
ELECTRICAL:
Frequency range: 0-15 GHz
Voltage rating: 500 Volts peak
Impedance: 50 ohm
Contact resistance: Center: 1.5 mohm - Outer: 1.0 mohm
Insulation resistance: 5000 Mohm min @ 1500 VDC between adjacent contacts (75°F and 50
Dielectric withstanding voltage: 1000 VAC min rms
RF leakage: -90 dB min @ 2-3 GHz

Environmental:
Lead free, RoHS compliant.

RoHS COMPLIANT

UNLESS OTHERWISE SPECIFIED
ALL DIMENSIONS ARE MM [INCHES]
TOLERANCES: EXCEPT AS NOTED

INCHES		HOLES	
.X	± .10	Ø.X	±.10
.XX	± .020	Ø.XX	±.015
.XXX	± .015	Ø.XXX	±.010

APPROVALS		DATE
DRAWN	SS	2/9/06
CHECKED		
APPROVED		

ADAM TECH
909 Rahway Avenue, Union, NJ 07083
Phone: 908-687-5000 Fax: 908-687-5710

TITLE
SMA, STRAIGHT, PCB MOUNT, 50 OHM
REVERSE POLARITY

SIZE	PART NO.	REV.
X	RF2-03-T-00-50-G	A

REF: SCALE: NTS SHEET 1 OF 1