| Rev | AWO # | Description | Date | Appr |
|---|---|---|---|---|
| - | | RELEASED | 2/22/11 | |

APPROVED: _____

DATE: _____ TITLE: _____

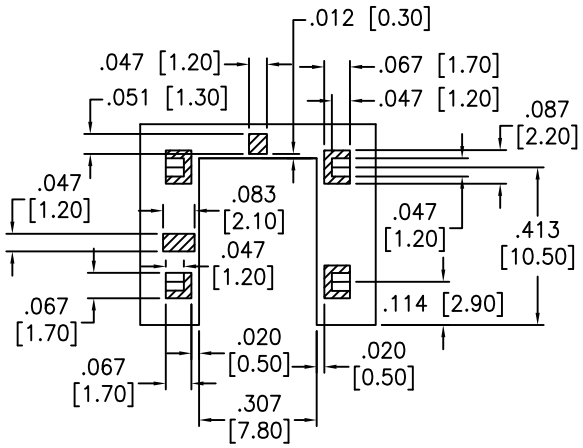


PCB BACK VIEW

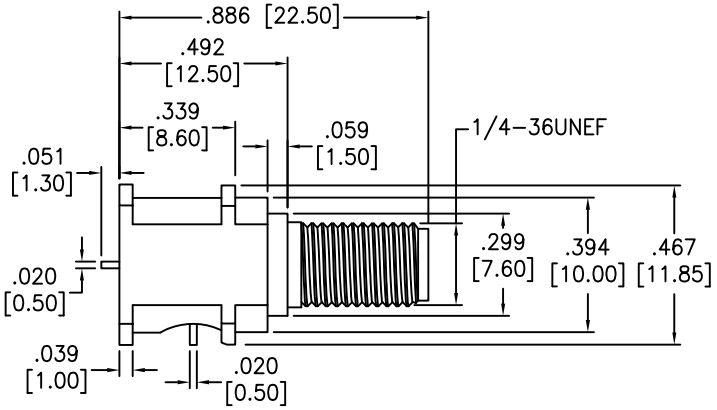


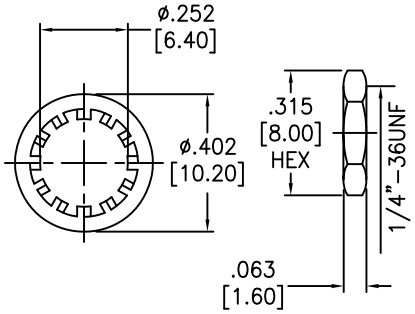


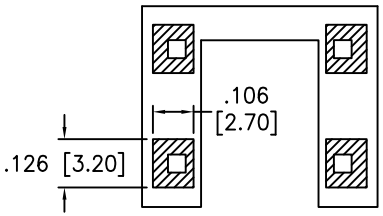


PCB BACK VIEW

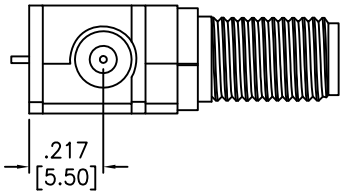


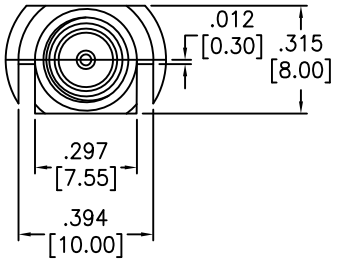


| DESCRIPTION | MATERIAL | FINISH |
|---|---|---|
| SPRING | STAINLESS | NONE |
| NUT | BRASS | GOLD |
| PIN | BRASS | GOLD |
| PIN | P.B | GOLD |
| INSULATOR | TEFLON | NONE |
| WASHER | BRASS | GOLD |
| BODY | BRASS | GOLD |

***SPECIFICATIONS:***

Electrical:
Frequency range: 0–18 GHz
Working Voltage: 250 VRMS max.
Dielectric Withstanding Voltage: 750 VRMS min.
Contact Resistance: 6 Milliohms max. (Center Contact)
2 Milliohms max. (Outer Contact)
Insulator Resistance: 5000 Megohms min.
Environmental:
Lead free, RoHS compliant.

RoHS COMPLIANT

UNLESS OTHERWISE SPECIFIED
ALL DIMENSIONS ARE INCHES [MM]
TOLERANCES: EXCEPT AS NOTED

| INCHES | | HOLES | |
|---|---|---|---|
| .X | ± .10 | Ø.X | ±.10 |
| .XX | ± .020 | Ø.XX | ±.015 |
| .XXX | ± .015 | Ø.XXX | ±.010 |

| APPROVALS | | DATE |
|---|---|---|
| DRAWN | DY | 2/22/11 |
| CHECKED | | |
| APPROVED | | |


**ADAM TECH**
909 Rahway Avenue, Union, NJ 07083
Phone: 908-687-5000 Fax: 908-687-5710


TITLE: SMA JACK FOR PCB SWITCH

| SIZE | PART NO. | REV. |
|---|---|---|
| X | RF2-500-15 | - |

REF: S00011T | SCALE: NTS | SHEET 1 OF 1