EXAMINED BY : Vincent Wu	EMERGING DISPLAY TECHNOLOGIES CORPORATION	FILE NO . CAS-0006797
		ISSUE : FEB.03, 2010
APPROVED BY: David Chang		TOTAL PAGE : 29
		VERSION : 6

CUSTOMER ACCEPTANCE SPECIFICATIONS

MODEL NO. :

ETV570G0DHU
(RoHS)

FOR MESSRS :

_____

CUSTOMER'S APPROVAL

DATE :

_____

BY :

_____

RECORDS OF REVISION

DOC . FIRST ISSUE

JAN.15, 2009

DATE	REVISED PAGE NO.	SUMMARY
FEB.18, 2009	3	4. ELECTRICAL CHARACTERISTICS POWER SUPPLY CURRENT FOR VCOM DRIVER : TYP.= 510 → (540), MAX.= 600 → (700)
	13	ADD 11.2 THE BRIGHTNESS CONTROLLED BY BACKLIGHT CURRENT OF LEDCTRL.
MAR.10, 2009	9	8. BLOCK DIAGRAM ADD FRAME GROUND & NOTE
APR.06, 2009	8	7. OUTLINE DIMENSIONS MARK △1 : MODIFY PCB OUTLINE AND CN1 TYPE.
AUG.25, 2009	3	4. ELECTRICAL CHARACTERISTICS POWER SUPPLY CURRENT FOR VCOM DRIVER : TYP.= (540) → 550, MAX.= (700) → 710
FEB.03, 2010	2	3.1 ELECTRICAL ABSOLUTE MAXIMUM RATINGS. INPUST SIGNAL VOLTAGE: MAX.=VCC+0.3 →VDD+0.3 3.2 ENVIRONMENTAL ABSOLUTE MAXIMUM RATINGS. ITEM: AMBIENT TEMPERATURE; OPERATING MIN. -10°C, OPERATING MAX. 60°C; STORAGE MIN. -20°C, STORAGE MAX. 70°C; REMARK NOTE (1) , (2) ↓ ITEM: AMBIENT TEMPERATURE; OPERATING MIN. -20°C, OPERATING MAX. 70°C; STORAGE MIN. -30°C, STORAGE MAX. 80°C; REMARK NOTE (1) , (2) NOTE (1) : Ta AT -20°C:48HR MAX. →-30°C:48HRS MAX. 70°C:168HR MAX. → 80°C:168HRS MAX.
	27	13.4.1 STANDARD SPECIFICATIONS FOR RELIABILITY OF LCD MODULE NO 1: High temperature operation — The sample should be allowed to stand at +60°C for 240 hrs NO 2: Low temperature operation — The sample should be allowed to stand at -10°C for 240 hrs NO 3: High temperature storage — The sample should be allowed to stand at +70°c for 240 hrs NO 4: Low temperature storage — The sample should be allowed to stand at -20°C for 240 hrs ↓ NO 1: High temperature operation — The sample should be allowed to stand at +70°C for 240 hrs NO 2: Low temperature operation — The sample should be allowed to stand at -20°C for 240 hrs NO 3: High temperature storage — The sample should be allowed to stand at +80°c for 240 hrs NO 4: Low temperature storage — The sample should be allowed to stand at -30°C for 240 hrs

TABLE OF CONTENTS

1. GENERAL SPECIFICATIONS

1.1 APPLICATION NOTES FOR CONTROLLER/DRIVER

PLEASE REFER TO :

HIMAX HX8250
HIMAX HX8678

1.2 MATERIAL SAFETY DESCRIPTION

ASSEMBLIES SHALL COMPLY WITH EUROPEAN ROHS REQUIREMENTS, INCLUDING PROHIBITED MATERIALS/COMPONENTS CONTAINING LEAD, MERCURY, CADMIUM, HEXAVALENT CHROMIUM, POLYBROMINATED BIPHENYLS (PBB) AND POLYBROMINATED DIPHENYL ETHERS (PBDE)

2. MECHANICAL SPECIFICATIONS

(1)	DIAGONALS	5.7 inch
(2)	NUMBER OF DOTS	640W * (RGB) * 480H DOTS
(3)	MODULE SIZE	124.7W * 100H *11.7D (MAX) mm (WITHOUT FPC)
(4)	EFFECTIVE AREA	117.2W * 88.4H mm (T/P)
(5)	ACTIVE AREA	115.2W * 86.4H mm (LCD) 116.2W * 87.4H mm (T/P)
(6)	DOT SIZE	0.06W * 0.18H mm
(7)	PIXEL SIZE	0.18W * 0.18H mm
(8)	LCD TYPE	TFT , TRANSMISSIVE
(9)	COLOR	262K
(10)	VIEWING DIRECTION	12 O'CLOCK
(11)	BACK LIGHT	LED , COLOR : WHITE
(12)	INTERFACE MODE	RGB 18BIT PARALLEL (DE/SYNC MODE)

3. ABSOLUTE MAXIMUM RATINGS

3.1 ELECTRICAL ABSOLUTE MAXIMUM RATINGS.

PARAMETER	SYMBOL	MIN.	MAX.	UNIT	REMARK
POWER SUPPLY VOLTAGE	VDD-VSS	-0.3	7.0	V	
	VCC-VSS	-0.3	7.0	V	
INPUT SIGNAL VOLTAGE	VIN-VSS	- 0.3	VDD+0.3	V	
STATIC ELECTRICITY	—	—	—	V	NOTE (1)
LED BACKLIGHT POWER DISSIPATION	PD	—	1192	W	
LED BACKLIGHT FORWARD CURRENT	IF	—	60	mA	
LED BACKLIGHT REVERSE VOLTAGE	VR	—	45	V	

NOTE (1) : LCM SHOULD BE GROUNDED DURING HANDING LCM.

3.2 ENVIRONMENTAL ABSOLUTE MAXIMUM RATINGS.

I T E M	OPERATING		STORAGE		REMARK
	MIN.	MAX.	MIN.	MAX.	
AMBIENT TEMPERATURE	-20°C	70°C	-30°C	80°C	NOTE (1) , (2)
HUMIDITY	NOTE (3)		NOTE (3)		WITHOUT CONDENSATION
VIBRATION	—	2.45 m/s^2 (0.25 G)	—	11.76 m/s^2 (1.2 G)	10~55Hz X,Y,Z,EACH 2HRS
SHOCK	—	29.4 m/s^2 (3 G)	—	490 m/s^2 (50 G)	6 m SECONDS XYZ DIRECTIONS 3 TIMES EACH
CORROSIVE GAS	NOT ACCEPTABLE		NOT ACCEPTABLE		

NOTE (1) : Ta AT -30°C : 48HRS MAX .
80°C : 168HRS MAX .
NOTE (2) : BACKGROUND COLOR CHANGES SLIGHTLY DEPENDING ON AMBIENT TEMPERATURE THIS PHENOMENON IS REVERSIBLE.
NOTE (3) : Ta ≤ 60°C : 90%RH MAX (96HRS MAX).
Ta > 60°C : ABSOLUTE HUMIDITY MUST BE LOWER THAN THE HUMIDITY OF 90%RH AT 60°C(96HRS MAX).

4. ELECTRICAL CHARACTERISTICS

Ta = 25 °C

PARAMETER	SYMBOL	CONDITION	MIN.	TYP.	MAX.	UNIT	REMARK
POWER SUPPLY VOLTAGE FOR DIGITAL	VDD−VSS	—	3	3.3	3.6	V	
POWER SUPPLY VOLTAGE FOR VCOM DRIVER	VCC−VSS	—	3	3.3	3.6	V	
POWER SUPPLY CURRENT FOR DIGITAL	IDD	VDD−VSS =3.3V	—	8	12	mA	NOTE (1)
POWER SUPPLY CURRENT FOR VCOM DRIVER	ICC	VCC−VSS = 3.3V LED B/L=ON	—	550	710	mA	
LOW LEVEL INPUT VOLTAGE	VIL	—	0	—	0.3*VDD	V	NOTE (2)
HIGH LEVEL INPUT VOLTAGE	VIH	—	0.7*VDD	—	VDD	V	
LOW LEVEL OUTPUT VOLTAGE	VOL	IOL = 400μA	0	—	0.2*VDD	V	NOTE (3)
HIGH LEVEL OUTPUT VOLTAGE	VOH	IOH = -400μA	0.8*VDD	—	VDD	V	
FRAME FREQUENCY	fFRAME	—	50	60	72	Hz	
POWER SUPPLY FOR LED BACKLIGHT	V_F	I_F=40mA	28	30	32	V	NOTE (4)
LED LIFE TIME	—	—	30000	40000	—	HRS	

NOTE (1) : THE DISPLAY PATTERN IS ALL "WHITE".
NOTE (2) : APPLIED TO TERMINALS /RESET, HSYNC, VSYNC, ENB, DCLK, B5~B0, G5~G0, R5~R0.
NOTE (3) : APPLIED TO TERMINALS B5~B0, G5~G0, R5~R0.
NOTE (4) : INTERNAL CIRCUIT DIAGRAM OF BACKLIGHT
(VF=VBL+(A)—VBL1–(K1)=VBL+(A) —VBL2–(K2))

NOTE (5) : AMBIENT TEMP. VS. ALLOWABLE FORWARD CURRENT.(PER LED)

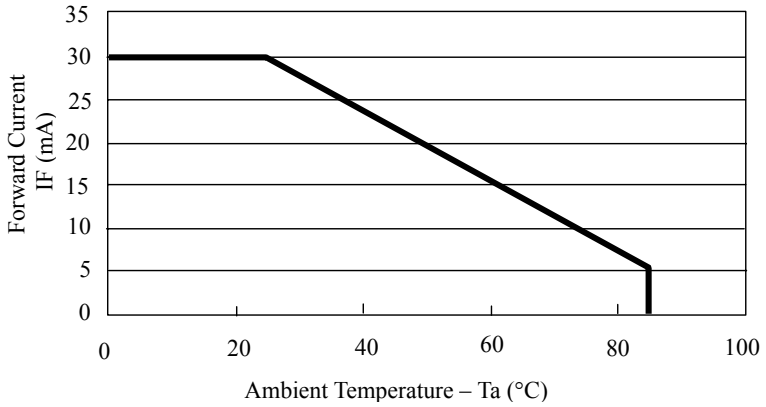

5 . TIMING CHARACTERISTICS

5.1 DIGITAL PARALLEL RGB INTERFACE (SYNC MODE)

ITEM	SYMBOL	MIN.	TYP.	MAX.	UNIT
DCLK FREQUENCY	F_{CPH}	22.66	25.175	27.69	MHz
DCLK PERIOD	T_{CPH}	36.11	39.7	44.13	ns
DCLK PULSE DUTY	T_{CWH}	40	50	60	%
HSYNC PERIOD	T_H	750	800	850	T_{CPH}
HSYNC PULSE WIDTH	T_{WH}	5	30	—	T_{CPH}
HSYNC FIRST HORIZONTAL DATA TIME	T_{HS}	112	144	175	T_{CPH}
HORIZONTAL ACTIVE DATA AREA	T_{HA}	—	640	—	T_{CPH}
VSYNC PULSE WIDTH	T_{WV}	1	3	5	T_H
FIRST LINE DATA INPUT TIME	T_{STV}	—	35	—	T_H
VSYNC PERIOD	T_V	515	525	535	T_H

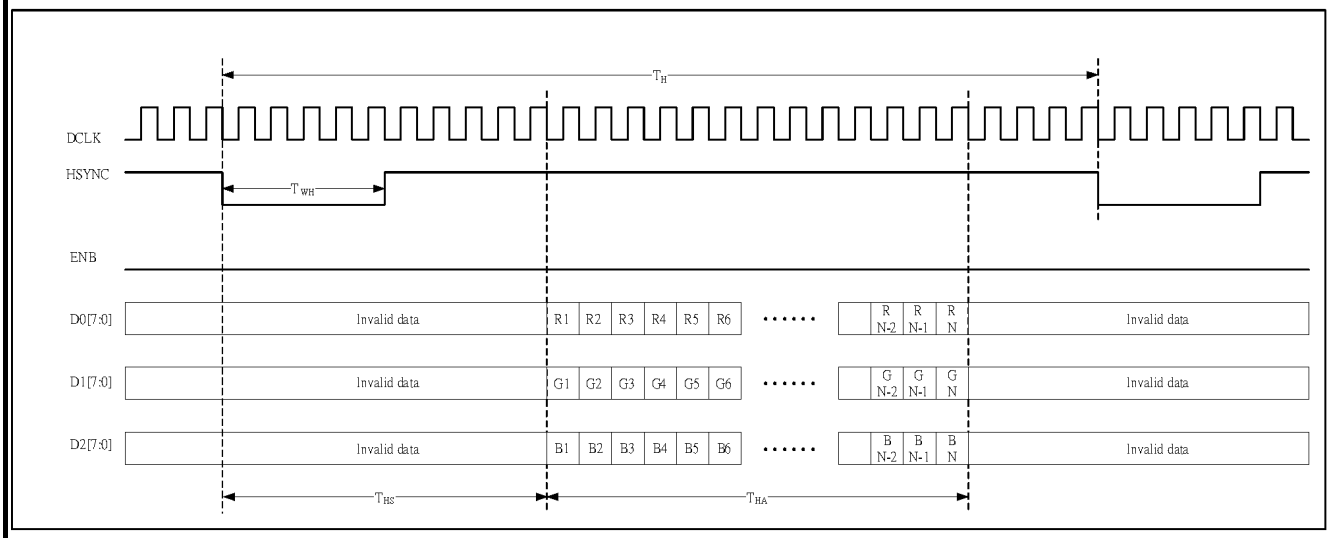

HORIZONTAL TIMING

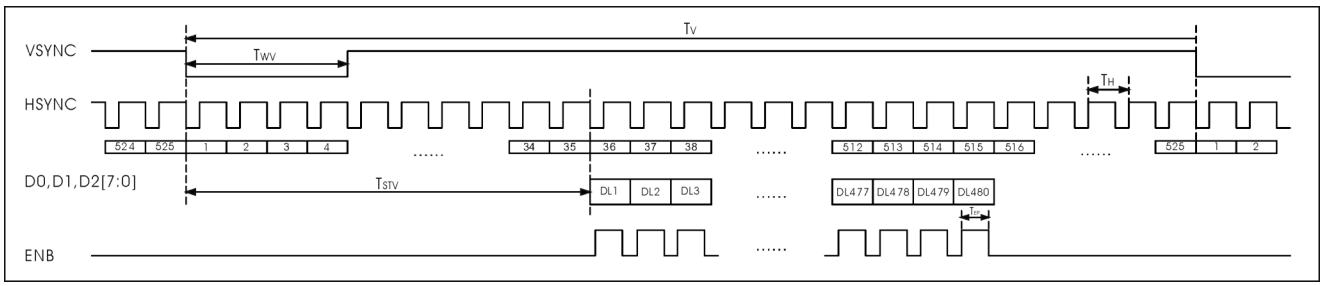

VERTICAL TIMING

5.2 DIGITAL PARALLEL RGB INTERFACE (DE MODE)

ITEM	SYMBOL	MIN.	TYP.	MAX.	UNIT
DCLK FREQUENCY	F_{CPH}	22.66	25.175	27.69	MHz
DCLK PERIOD	T_{CPH}	36.11	39.7	44.13	ns
DCLK PULSE DUTY	T_{CWH}	40	50	60	%
ENB PERIOD	T_{DEN}	750	800	850	T_{CPH}
ENB PULSE WIDTH	T_{EP}	—	640	—	T_{CPH}
ENB FRAME ACTIVE TIME	T_{DEA}	—	480	—	T_{DEN}
ENB FRAME BLANKING TIME	T_{DEB}	10	45	110	T_{DEN}

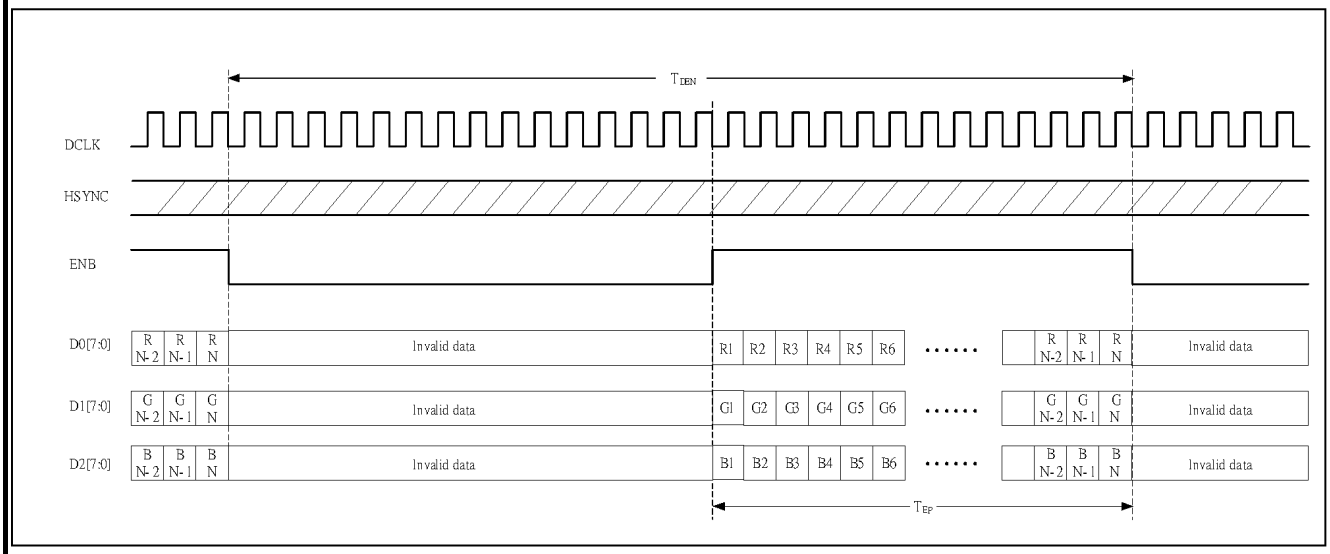

HORIZONTAL TIMING

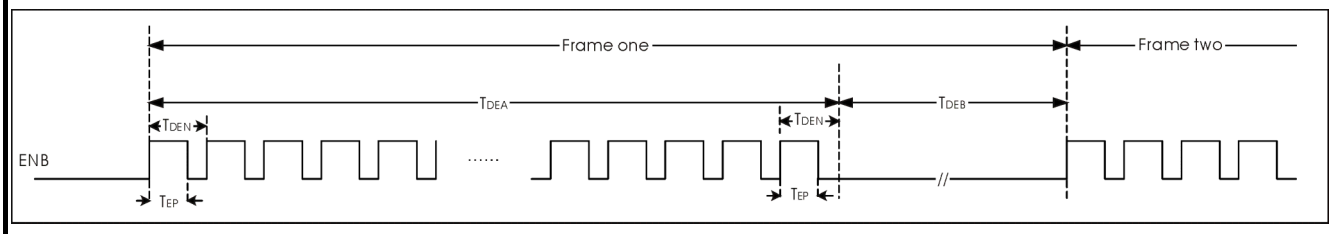

VERTICAL TIMING

6 . OPTICAL CHARACTERISTICS (NOTE1)

6.1 OPTICAL CHARACTERISTICS

Ta = 25 ± 2 °C

I T E M		SYMBOL	CONDITION		MIN.	TYP.	MAX.	UNIT	REMARK
VIEWING ANGLE		θ_{y+}	CR ≥ 10	θ_x=0°	50	55	—	deg.	NOTE(2) NOTE (3)
		θ_{y-}			47	52	—		
		θ_{x+}		θ_y=0°	60	65	—		
		θ_{x-}			60	65	—		
CONTRAST RATIO		CR	θx=0° , θy=0°		300	350	—	—	NOTE (3)
RESPONSE TIME		T_R (rise)	θx=0° , θy=0°		—	15	30	msec	NOTE (4)
		T_F (fall)			—	35	50		
COLOR OF CIE COORDINATE	WHITE	Wx	θx=0° , θy=0° IF = 40mA NTSC : 50 %		0.26	0.31	0.36	—	NOTE (5)
		Wy			0.30	0.35	0.40		
	RED	Rx			0.56	0.61	0.66	—	
		Ry			0.31	0.36	0.41		
	GREEN	Gx			0.28	0.33	0.38	—	
		Gy			0.51	0.56	0.61		
	BLUE	Bx			0.09	0.14	0.19	—	
		By			0.07	0.12	0.17		
THE BRIGHTNESS OF MODULE		B	θx=0° , θy=0° IF = 40mA		350	400	—	cd/m^2	NOTE (6)
THE UNIFORMITY OF MODULE		—			75	80	—	%	

NOTE (1) : TEST EQUIPMENT SETUP :
AFTER STABILIZING AND LEAVING THE PANEL ALONE AT A GIVEN TEMPERATURE FOR 30 MINUTES , THE MEASUREMENT SHOULD BE EXECUTED. MEASUREMENT SHOULD BE EXECUTED IN A STABLE , WINDLESS , AND DARK ROOM. OPTICAL SPECIFICATIONS ARE MEASURED BY TOPCON BM-7 (FAST) WITH A VIEWING ANGLE OF 1° AT A DISTANCE OF 50cm AND NORMAL DIRECTION.

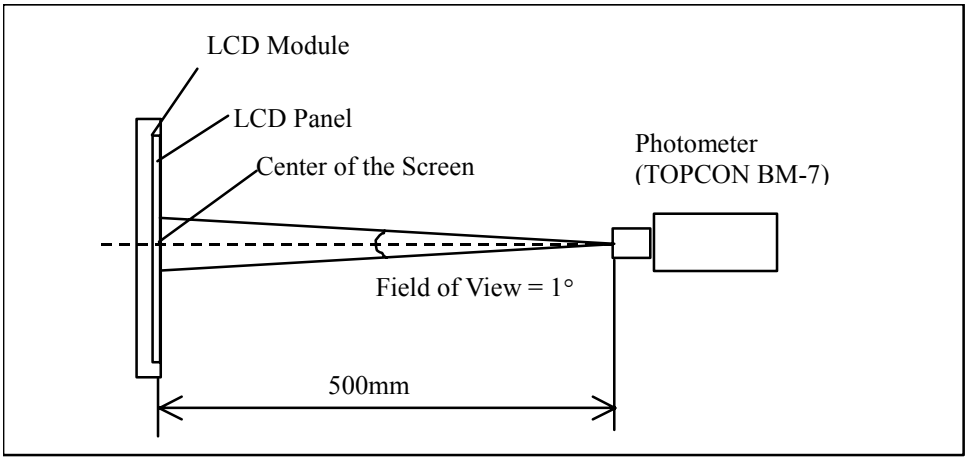

NOTE (2) : DEFINITION OF VIEWING ANGLE :

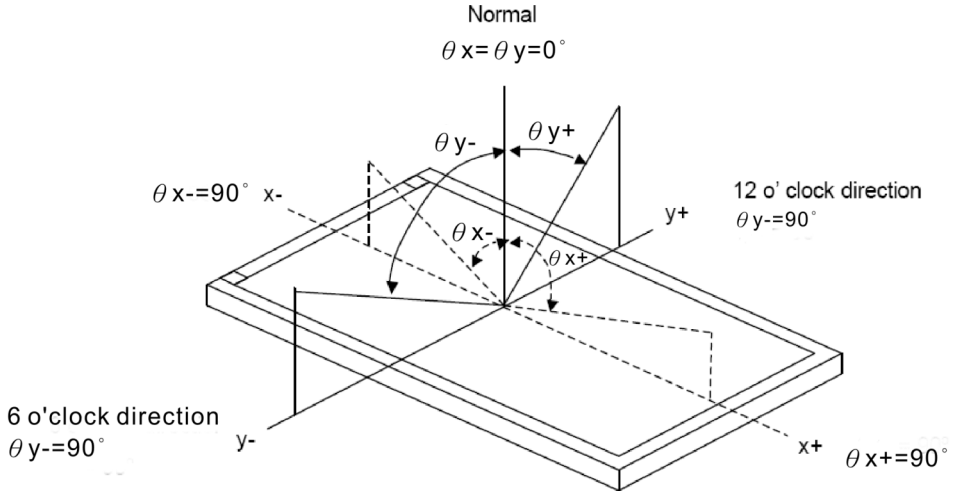

NOTE (3) : DEFINITION OF CONTRAST RATIO :

$$\text{CONTRAST RATIO(CR)} = \frac{\text{BRIGHTNESS MEASURED WHEN LCD IS AT "WHITE STATE"}}{\text{BRIGHTNESS MEASURED WHEN LCD IS AT "BLACK STATE"}}$$

NOTE (4) : DEFINITION OF RESPONSE TIME : T_R AND T_F
THE FIGURE BELOW IS THE OUTPUT SIGNAL OF THE PHOTO DETECTOR.

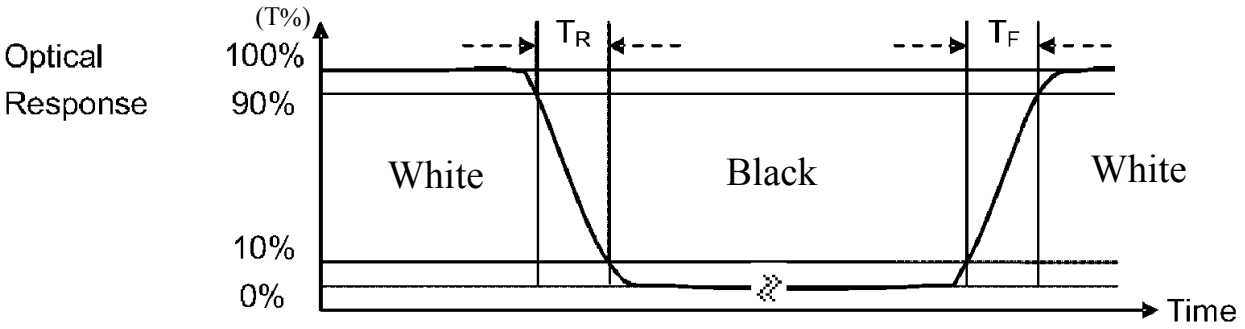

NOTE (5) : THE 100% TRANSMISSION IS DEFINED AS THE TRANSMISSION OF LCD PANEL WHEN ALL THE INPUT TERMINALS OF MODULE ARE ELECTRICALLY OPENED.

NOTE (6) : BRIGHTNESS MEASURED WHEN LCD IS AT ”WHITE STATE”

6.2 THE TEST METHOD OF BRIGHTNESS AND UNIFORMITY

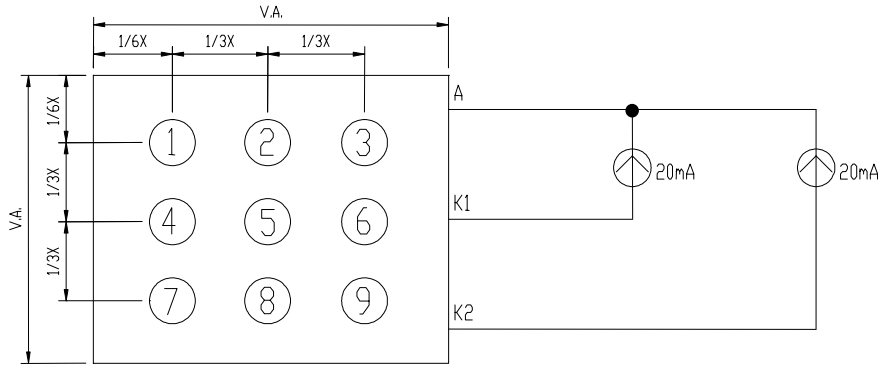

UNIT：mm

6.3 THE CALCULATING METHOD OF UNIFORMITY

$$\text{UNIFORMITY}: \left[1 - \frac{\text{MAXIMUM BRIGHTNESS} - \text{MINIMUM BRIGHTNESS}}{\text{AVERAGE BRIGHTNESS}}\right] \times 100\%$$

7. OUTLINE DIMENSIONS

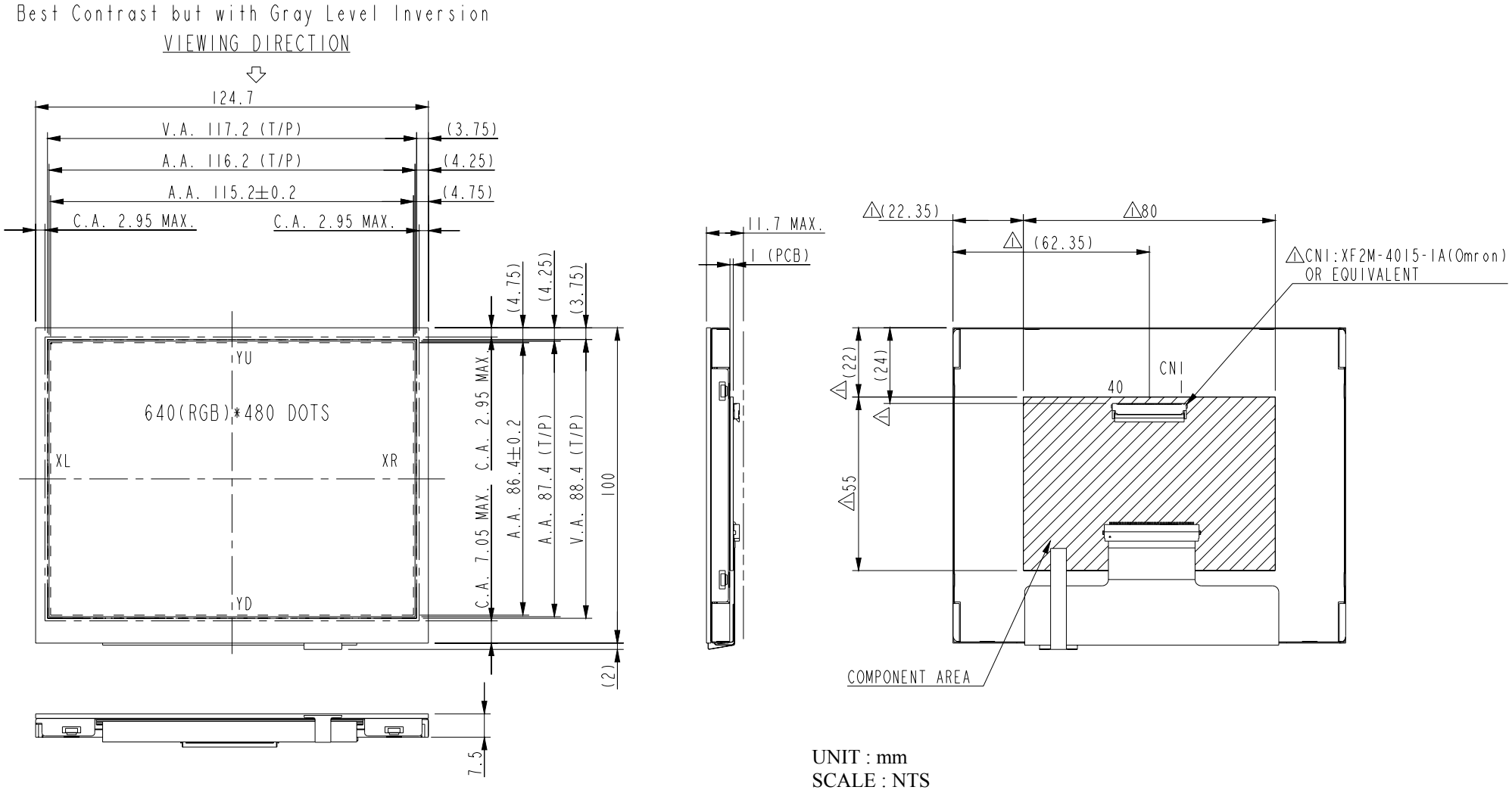

UNIT : mm
SCALE : NTS
NOT SPECIFIED TOLERANCE IS ± 0.5
NOTE : MARK △ MODIFY (NUMBER NOTE MODIFY VERSION)

8. BLOCK DIAGRAM

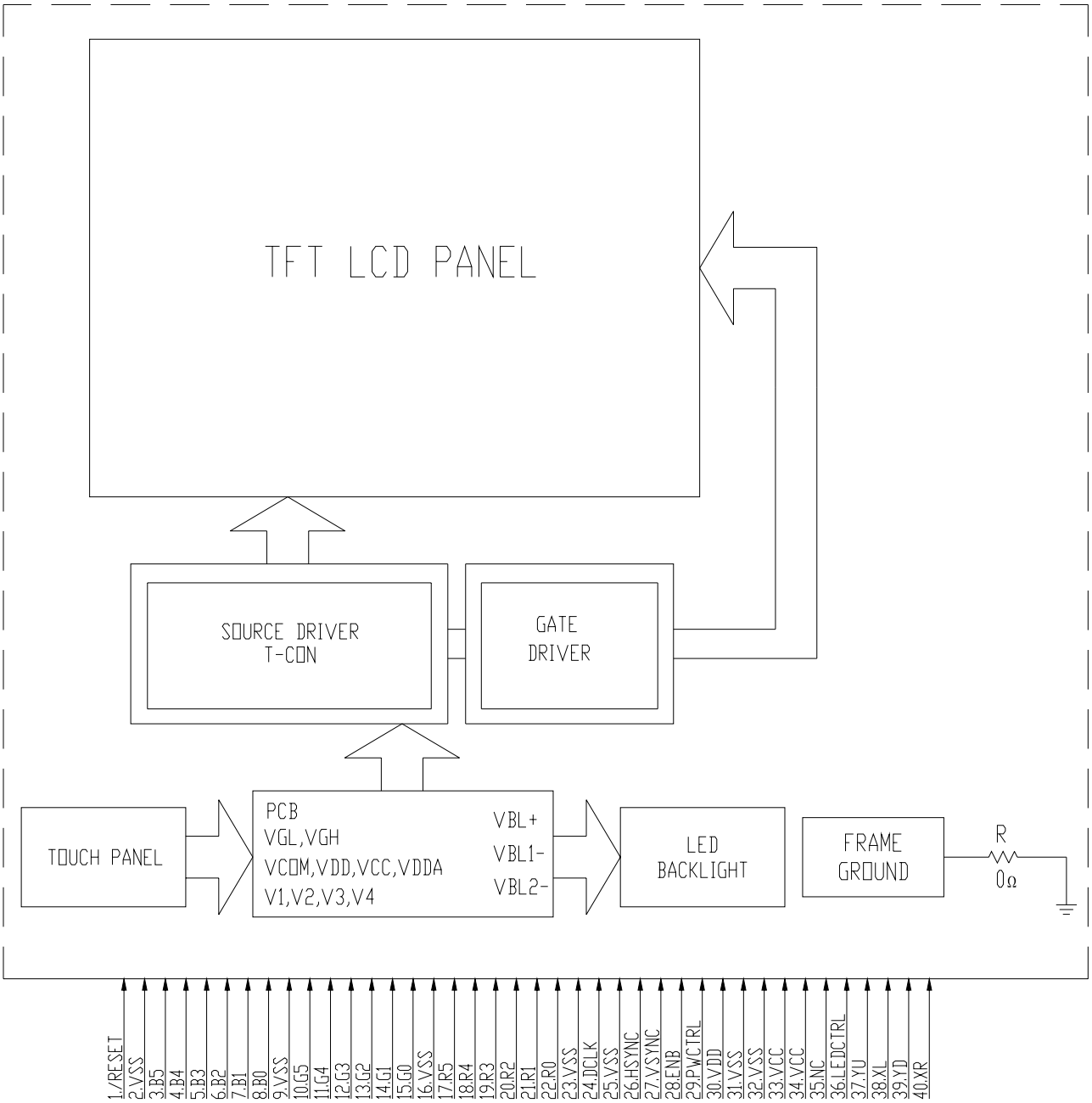

NOTE : UD = "H" LEVEL : OUT1→480 ; LR = "H" LEVEL : OUT1→960(DEFAULT)
"L LEVEL : OUT480→1 (DEFAULT) "L" LEVEL : OUT960→1

9. DETAIL DRAWING OF DOT MATRIX

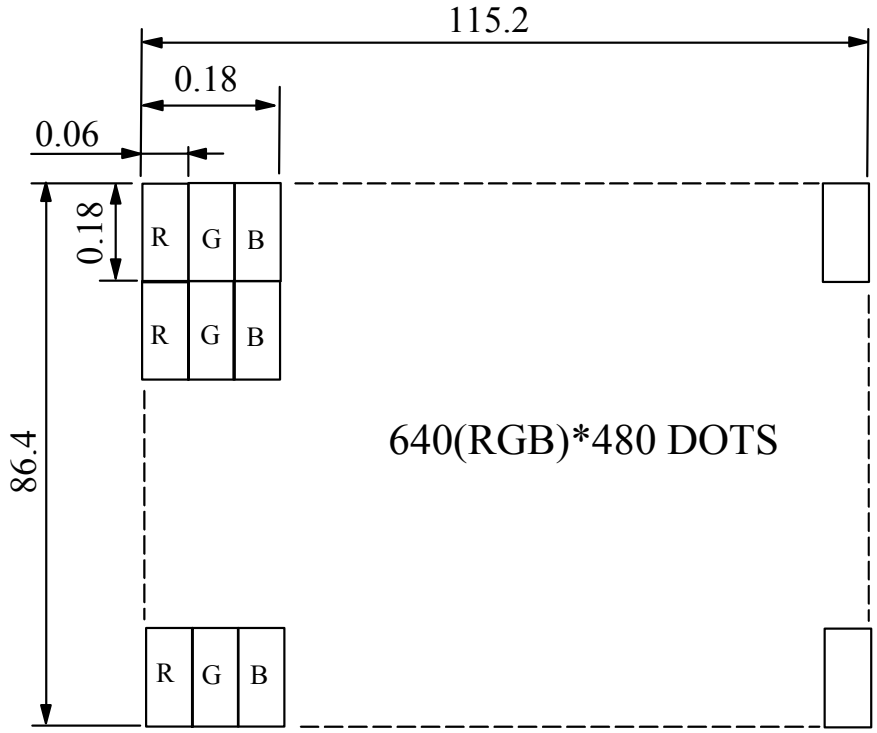

UNIT : mm
SCALE : NTS
NOT SPECIFIED TOLERANCE IS ± 0.1
DOTS MATRIX TOLERANCE IS ± 0.01

10. INTERFACE SIGNALS

PIN NO	SYMBOL	I/O	FUNCTION
1	/RESET	I	HARDWARE RESET
2	VSS	P	GROUND (VSS IS CONNECTED TO METAL HOUSING WITH CONDUCTIVE TAPE)
3	B5	I	BLUE DATA BIT 5
4	B4	I	BLUE DATA BIT 4
5	B3	I	BLUE DATA BIT 3
6	B2	I	BLUE DATA BIT 2
7	B1	I	BLUE DATA BIT 1
8	B0	I	BLUE DATA BIT 0
9	VSS	P	GROUND (VSS IS CONNECTED TO METAL HOUSING WITH CONDUCTIVE TAPE)
10	G5	I	GREEN DATA BIT 5
11	G4	I	GREEN DATA BIT 4
12	G3	I	GREEN DATA BIT 3
13	G2	I	GREEN DATA BIT 2
14	G1	I	GREEN DATA BIT 1
15	G0	I	GREEN DATA BIT 0
16	VSS	P	GROUND (VSS IS CONNECTED TO METAL HOUSING WITH CONDUCTIVE TAPE)
17	R5	I	RED DATA BIT 5
18	R4	I	RED DATA BIT 4
19	R3	I	RED DATA BIT 3
20	R2	I	RED DATA BIT 2
21	R1	I	RED DATA BIT 1
22	R0	I	RED DATA BIT 0
23	VSS	P	GROUND (VSS IS CONNECTED TO METAL HOUSING WITH CONDUCTIVE TAPE)
24	DCLK	I	DOT DATA CLOCK
25	VSS	P	GROUND (VSS IS CONNECTED TO METAL HOUSING WITH CONDUCTIVE TAPE)
26	HSYNC	I	HORIZONTAL SYNC INPUT
27	VSYNC	I	VERTICAL SYNC INPUT
28	ENB	I	DATA ENABLE INPUT

<table>
<tr><th>PIN NO</th><th>SYMBOL</th><th>I/O</th><th>FUNCTION</th></tr>
<tr><td>29</td><td>PWCTRL</td><td>I</td><td>
<table>
<tr><th></th><th>PWCTRL</th><th>REMARK</th></tr>
<tr><td rowspan="2">LOGIC LEVEL
H=3.3V
L=0V</td><td>H</td><td>POWER ON</td></tr>
<tr><td>L</td><td>SHUTDOWN</td></tr>
</table>
WHEN INTERNAL LED DRIVER : JP15 1-2(DEFAULT)
WHEN EXTERNAL LED DRIVER : JP15 2-3</td></tr>
<tr><td>30</td><td>VDD</td><td>P</td><td>POWER SUPPLY FOR DIGITAL CIRCUIT</td></tr>
<tr><td>31</td><td>VSS</td><td>P</td><td>GROUND (VSS IS CONNECTED TO METAL HOUSING WITH CONDUCTIVE TAPE)</td></tr>
<tr><td>32</td><td>VSS</td><td>P</td><td>GROUND (VSS IS CONNECTED TO METAL HOUSING WITH CONDUCTIVE TAPE)</td></tr>
<tr><td>33</td><td>VCC</td><td>P</td><td>POWER SUPPLY FOR VCOM DRIVER CIRCUIT</td></tr>
<tr><td>34</td><td>VCC</td><td>P</td><td>POWER SUPPLY FOR VCOM DRIVER CIRCUIT</td></tr>
<tr><td>35</td><td>NC</td><td>—</td><td>NON CONNECTION(USING INTERNAL LED DRIVER) OR ANODE (USING EXTERNAL LED DRIVER)
WHEN INTERNAL LED DRIVER：JP5 1-2 (DEFAULT)
WHEN EXTERNAL LED DRIVER：JP5 2-3</td></tr>
<tr><td>36</td><td>LEDCTRL</td><td>I</td><td>BRIGHTNESS CONTROL FOR LED BACKLIGHT；
LEDCTRL (USING INTERNAL LED DRIVER) OR CATHODE (USING EXTERNAL LED DRIVER)
WHEN INTERNAL LED DRIVER：JP6 1-2 (DEFAULT)
JP14 1-2 (DEFAULT)
WHEN EXTERNAL LED DRIVER：JP6 2-3
JP14 NON CONNECTION</td></tr>
<tr><td>37</td><td>YU</td><td>—</td><td>TOP PANEL</td><td rowspan="4">TOUCH PANEL</td></tr>
<tr><td>38</td><td>XL</td><td>—</td><td>LEFT PANEL</td></tr>
<tr><td>39</td><td>YD</td><td>—</td><td>BOTTOM PANEL</td></tr>
<tr><td>40</td><td>XR</td><td>—</td><td>RIGHT PANEL</td></tr>
</table>

11. POWER SUPPLY

11.1 POWER SUPPLY FOR LCM

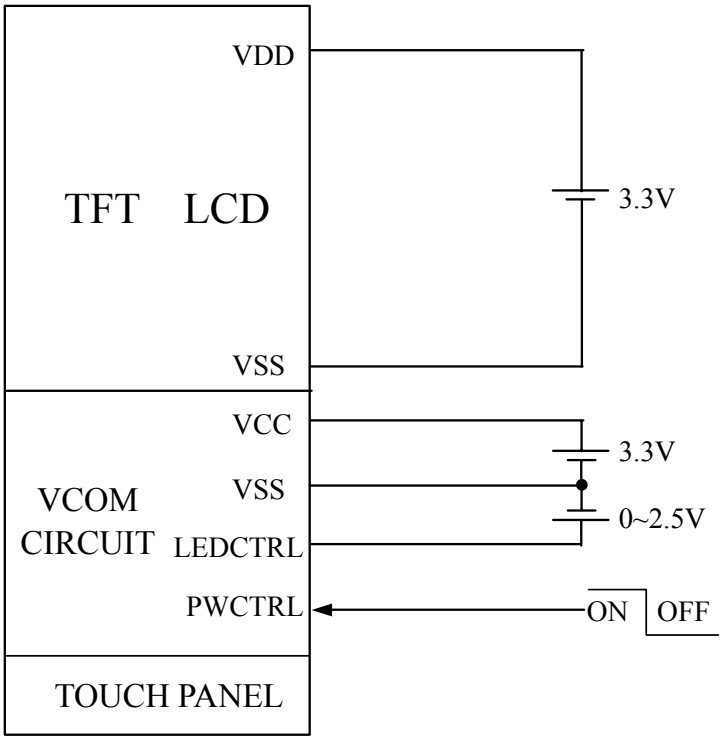

11.2 THE BRIGHTNESS CONTROLLED BY BACKLIGHT CURRENT OF LEDCTRL

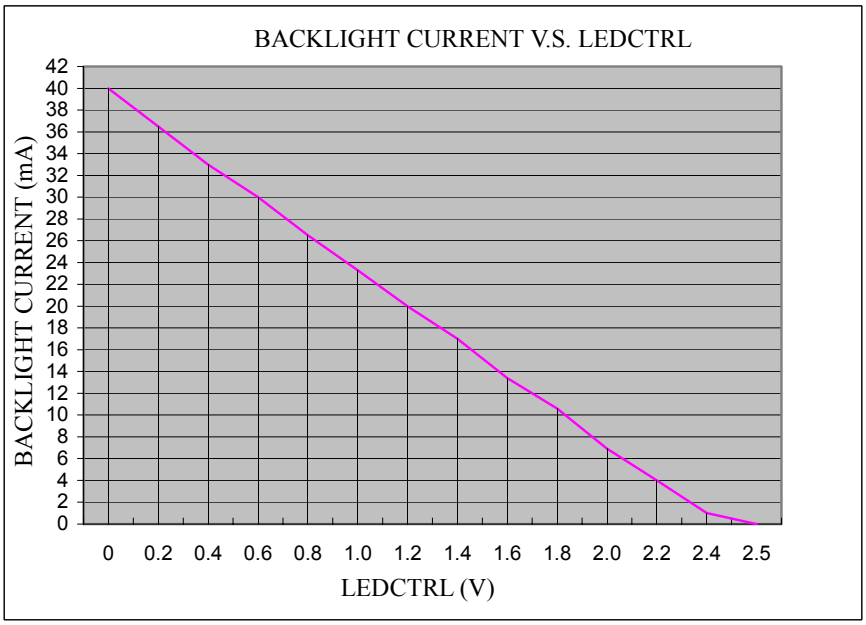

12 . TOUCH PANEL SPECIFICATION

12.1 ELECTRICAL CHARACTERISTICS

Ta = 25°C

ITEM	CONDITION	SPEC.	UNIT
LINEARITY	—	≤ 1.5	%
TRANSMISSION	ASTM D1003	80 OR MORE	%
ON LOAD	POLYACETAL PEN INPUT	15 ~ 80	g
TERMINAL RESISTANCE	X AXIS	400 ~ 1000	Ω
	Y AXIS	200 ~ 700	
INSULATION RESISTANCE	DC25V	≥ 10	MΩ
INPUT VOLTAGE	—	5	V

12.2 PRECAUTIONS IN USE OF TOUCH PANEL

12.2.1 PURPOSE：

IN ORDER TO PREVENT ACCIDENTAL USE AND PERFORMANCE DETERIORATION, PLEASE KEEP THE FOLLOWING PRECAUTIONS AND INHIBITED POINTS.

12.2.2 ITEM AND ILLUSTRATION：

(1) STRUCTURE, AREA DEFINITION

THE STRUCTURE AND THE PERFORMANCE GUARANTEED AREA OF THIS TOUCH PANEL ARE DEFINED BELOW：

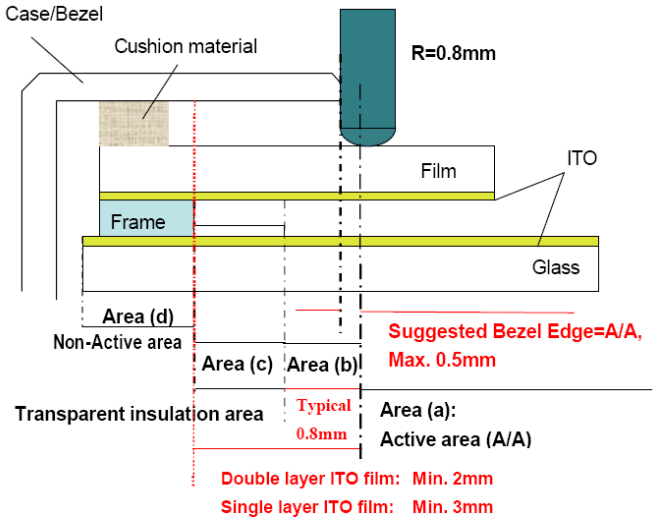

THE ABOVE FIGURE IS OUR DESIGN RULE OF TOUCH PANEL.
IF IT CANNOT MEET YOUR REQUIREMENT, PLEASE CONTACT WITH OUR ENGINEERS FOR FURTHER DISCUSSION.

ABOVE FIGURE ILLUSTRATES THE RECOMMENDED BEZEL AND CUSHION DESIGN. IN ORDER TO PREVENT
UNUSUAL PERFORMANCE DEGRADATION AND MALFUNCTION OF A TOUCH PANEL, PLEASE CARRY OUT THE SET
CASE DESIGNING AND A TOUCH PANEL ASSEMBLING METHOD AFTER SURELY CONSIDERING THE DEFINITION OF EACH AREA ILLUSTRATED IN ABOVE FIGURE.

AREA(a)：ACTIVE AREA

THE ACTIVE AREA IS GUARANTEED THE POSITION DATA DETECTABLE PRECISION, OPERATION FORCE AND OTHER OPERATIONS. IT IS STRONGLY RECOMMENDED TO PLACE THE OPERATION BUTTON OR MENU KEYS WITHIN THE ACTIVE AREA. DUE TO STRUCTURE, THE ACTIVE AREA IS LESS DURABLE AT THE EDGE OR CLOSE TO THE EDGE.

AREA(b)：OPERATION NON-GUARANTEED AREA

THIS AREA DOES NOT GUARANTEE A TOUCH PANEL OPERATION AND ITS FUNCTION. WHEN THIS AREA IS PRESSED, TOUCH PANEL SHOWS DEGRADATION OF ITS PERFORMANCE AND DURABILITY SUCH AS A PEN SLIDING DURABILITY BECOMES ABOUT ONE-TENTH COMPARED WITH THE ACTIVE AREA (AREA-(A) AS GUARANTEED AREA) AND ITS OPERATION FORCE REQUIRES ABOUT DOUBLE. ABOUT 0.5 MM OUTSIDE FROM A BOUNDARY OF THE ACTIVE AREA CORRESPONDS TO THIS AREA.

AREA(c)：PRESSING PROHIBITION AREA

THE AREA WHICH FORBIDS PRESSING, BECAUSE AN EXCESSIVE LOAD IS APPLIED TO A TRANSPARENT ELECTRODE (ITO) AND A SERIOUS DAMAGE IS GIVEN TO A TOUCH PANEL FUNCTION BY PRESSING.

AREA(d)：NON-ACTIVE AREA

THE AREA DOES NOT ACTIVATE EVEN IF PRESSED.

(2) CAUTIONS FOR INSTALLING AND ASSEMBLING

(i) DO NOT GIVE EXCESSIVE STRAIN TO THE PRODUCT.

(ii) FLEXIBLE PATTERN CABLE IS CONNECTED TO THE BODY BY THERMAL PRESSURE METHOD. SO, DO NOT APPLY EXCESSIVE FORCES TO THE FLEXIBLE PATTERN. DO NOT ADD AN EXCESSIVE FORCE TO A FPC(FLEX TAIL) THAT MAKES PEELING OFF OF THE FPC FROM THE PRODUCT. DO NOT FIX, ADHERE OR MOUNT ANY ADDITIONAL GOODS ON THE FPC SUCH AS ADDITIONAL FILM/PLATE ON THE FPC, BECAUSE SUCH ADDITIONAL GOODS WILL APPLY A STRESS AT THE FPC BONDING AREA. IT MAY AFFECT THE CONDUCTIVITY OF FPC WITH TOUCH PANEL.

(iii) IN ORDER NOT TO APPLY LOAD ON THE DISPLAY, PROVIDE A CLEARANCE OF AT LEAST 0.3MM BETWEEN THE PRODUCT AND DISPLAY.

(iv) WE RECOMMEND THE DESIGN OF A CASE OR BEZEL SHOULD COVERS THE BOUNDARY OF THE ACTIVE AREA INSIDE IN ORDER TO PREVENT AN OPERATION AT OUTSIDE OF THE ACTIVE AREA WHICH CAN NOT GUARANTEE THE FUNCTION OR DURABILITY (REFER TO ITEM 5.1.2. STRUCTURE, AREA DEFINITION).
BEZEL'S EDGE PART MAY GUIDE THE PEN SLIDING ON THE SAME POSITION REPEATEDLY. IF THE BEZEL IS PLACED OUTSIDE OF THE ACTIVE AREA, IT MAY CAUSE THE DAMAGE OF THE ITO FILM.

(v) PRESSING INSIDE OF BOUNDARY OF THE FRAME(PART (A) AS SHOWN IN BELOW) MAY CAUSES FAULT OPERATION, SO PLEASE DESIGN TO AVOID PRESSING OF TOUCH PANEL AT PART (A) SUCH AS HAVING GASKET/CUSHION AT PART (C). PARTICULARLY THE AREA (B) SHALL BE FREE FROM BURR. THE GASKET/CUSHION MATERIAL AT THE PART (C) SHOULD NOT BE EXCEEDED TO INSIDE OF THE BOUNDARY OF THE FRAME.

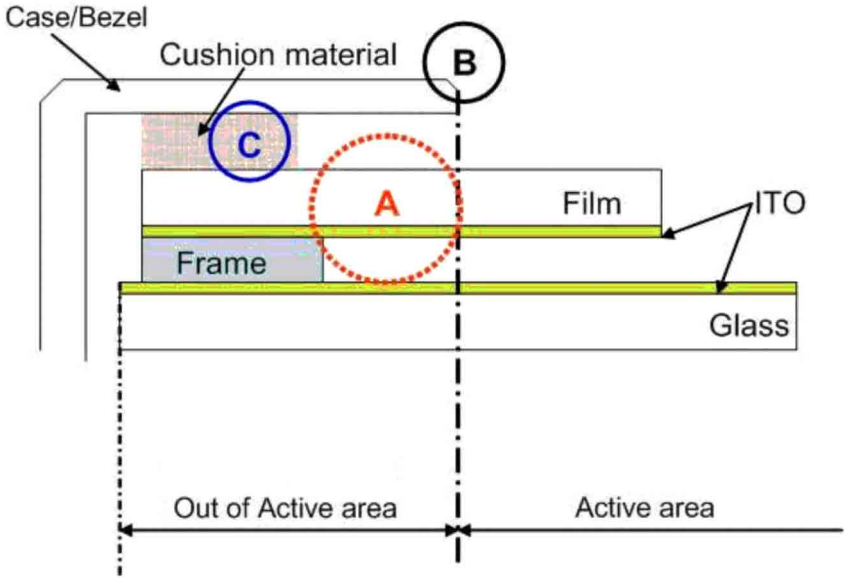

(vi) TO PREVENT GIVING DISTORTION TO THE FILM OF THE PRODUCT AND PEELING OFF OF THE FILM FROM THE PRODUCT, DO NOT FIX THE FILM AND A SET CASE OR A SHOCK ABSORBING MATERIAL ADHERED TO A SET CASE BY ADHESION.

(vii) WIPE OFF THE STAIN ON THE PRODUCT BY USING SOFT CLOTH MOISTENED WITH ETHANOL. TAKE CARE NOT TO ALLOW ETHANOL TO SOAK INTO THE JOINT OF UPPER FILM AND BOTTOM GLASS. IT MAY OTHERWISE CAUSE PEELING OR DEFECTIVE OPERATION. DO NOT USE ANY ORGANIC SOLVENT OR DETERGENT OTHER THAN ETHANOL.

(viii) THE CORNERS OF THE PRODUCT ARE NOT CHAMFERED AND ARE SHARP. WHEN POSITIONING AND FIXING THE PRODUCT ON THE CASE, PROVIDE A ROUND PART ON THE CORNER OF THE CASE SO AS NOT TO APPLY LOAD ON THE CORNER OF THE TRANSPARENT TOUCH PANEL.

(ix) DO NOT PRESS THE FILM OF THE PRODUCT WHEN THIS PRODUCT IS BUILT INTO A SET.

(3) CAUTIONS FOR OPERATION

(i) OPERATE IT WITH A POLYACETAL PEN (TIP R0.8 OR OVER) OR A BELLY OF A FINGER WITHOUT APPLYING EXCESSIVE LOAD. NEVER USE ANY MECHANICAL PENCILS, BALL POINT PENS AND HARD FINGERTIPS WHO'S TIP IS HARD FOR INPUT, OTHERWISE MALFUNCTIONS MAY RESULT.

(ii) THE INPUT POSITION MAY BE FLUCTUATED A LITTLE THROUGH LONG-TIME USE. IT IS DESIRABLE TO PROVIDE A ZERO-ADJUSTMENT FUNCTION BY USING A CIRCUIT AND SOFTWARE.

(iii) OPERATION AT THE OUT OF ACTIVE AREA IS OUT OF OUR GUARANTEE. IT CAUSES A SERIOUS DAMAGE OF A TRANSPARENT ELECTRODE. DO NOT OPERATE AT THE OUT OF ACTIVE AREA.

(iv) IN CASE OF CLEANING THE PART OF THE CASE BOUNDARY OF ACCOMPLISHED SET, USE A SOFT CLOTH WITH A FINGER BERRY OR A COTTON BUD. DO NOT CLEAN WITH A THI NG OTHER THAN THE FINGER SUCH AS HARD OR SHARP EDGES LIKE A FINGER NAIL ETC. ON THE CLOTH, BECAUSE IT CAUSE TRANSPARENT CONDUCTIVE FILM CRACKS. PLEASE ADVISE THIS PROHIBITION TO YOUR LAST CUSTOMERS.

12.3 DURABILITY

12.3.1 STYLUS HITTING：

ONE MILLION TIMES OR OVER
NO DAMAGE ON FILM SURFACE
PEN：R8 mm SILICON RUBBER
LOAD：250g
FREQUENCY：240 times/min
MEASUREMENT POSITION:
1 POINT OF TOUCH PANEL ACTIVE AREA
REPEATED：OVER 1,000,000 TIMES

12.3.2 PEN TOUCH SLIDING DURABILITY：

100,000 TIMES OR OVER
WRITING WITH R0.8mm PLASTIC STYLUS PEN; WRITING FORCE 150g IN ACTIVE AREA.
SPEED IS 60mm/sec.

12.4 STEEL BALL DROP TEST

BY USING F9mm STEEL BALL FROM THE HEIGHT OF 30cm AND FALLING ON TOUCH PANEL SURFACE, MUST PASS BELOW CONDITIONS：

APPEARANCE：THE APPEARANCE WITHOUT ANY CHANGE, INCLUDING THE PANEL BROKEN.

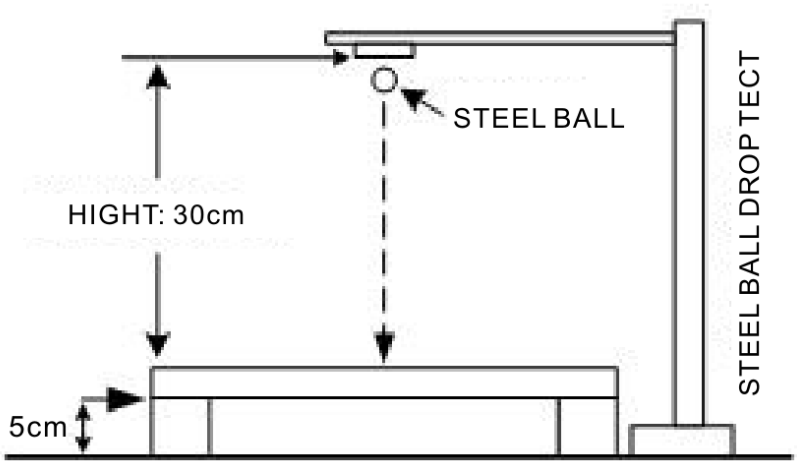

12.5 APPEARANCE INSPECTION

PURPOSE：

TO ESTABLISH APPEARANCE STANDARD AND MAINTAIN PRODUCT QUALITY。

SCOPE：

TOUCH PANEL VIEW AREA WITHIN TOUCH PANEL。

12.5.1 RULE：

INSPECTION CONDITION

(A) ENVIRONMENTAL LUMINANCE：500 LUX。

(B) DISTANCE BETWEEN HUMAN EYES AND PANEL：30 CM

(PANEL MUST BE TESTED UNDER LIGHT TRANSPARENT)。

(C) VISUAL ANGEL： > 60°。

(D) LIGHT SOURCE： FLUORESCENT LIGHT SOURCE。

12.5.2 JUDGE CRITERION：

JUDGEMENT UNDER ABOVE MENTIONED CRITERION (PANEL MUST BE TESTED UNDER LIGHT TRANSPARENT),

TESTING GOODS DEFECT CAN BE VISIBLE WITHIN 10 SECONDS, WHICH WILL BE JUDGED AS MAJOR DEFECTS。

SAMPLING STANDARD：

THE SAMPLING STANDARD WILL BE CONFIRMED BY BOTH OF EDT AND CUSTOMER.

INSPECTION ITEMS	SEPC.		JUDGE CRITERION	OPERATION GUIDELINE
SCRATCH	W ≤ 0.05mm & L≤10mm		ACCEPTABLE	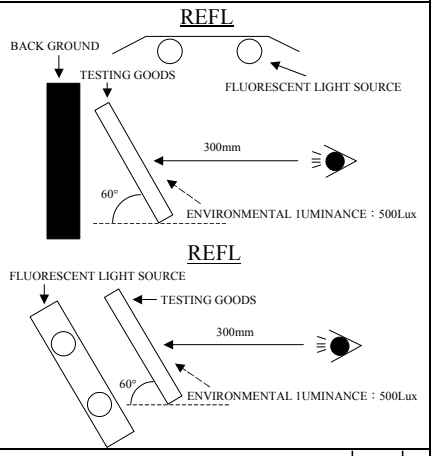
	W > 0.05mm or L > 10mm		NOT ACCEPTABLE	
LINEAR FOREIGN OBJECT	W ≤ 0.05mm & L ≤5mm		ACCEPTABLE	
	W > 0.05mm or L >5mm		NOT ACCEPTABLE	
GRANULAR FOREIGN OBJECT	D ≤ 0.25mm		ACCEPTABLE	
	0.25mm < D ≤0.30mm		MAX. 2 EA	
	D >0.30mm		NOT ACCEPTABLE	
PET BUBBLES	D ≤0.5mm		ACCEPTABLE	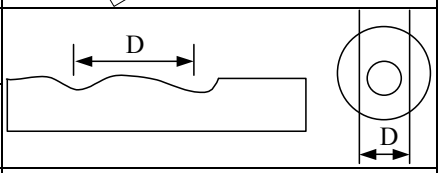
	D >0.5mm		NOT ACCEPTABLE	
CHIP ON GLASS	CORNER	X ≤ 3mm 、Y ≤ 3mm、Z < t (t = /thickness)	ACCEPTABLE	Chip of glass 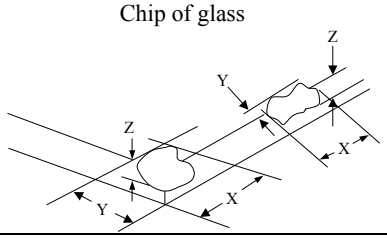
	EDGE	W ≤ 3mm、Y ≤ 3mm、Z < t		

13. INSPECTION CRITERION

13.1 APPLICATION

This inspection standard is to be applied to the LCD module delivered from EMERGING DISPLAY TECHNOLOGIES CORP.(E.D.T) to customers

13.2 INSPECTION CONDITIONS

13.2.1 (1)Observation Distance : 35cm±5cm
(2)View Angle :
Non-operation Condition : ±5°(perpendicular to LCD panel surface)
Operation Condition : ±45° (perpendicular to LCD panel surface)

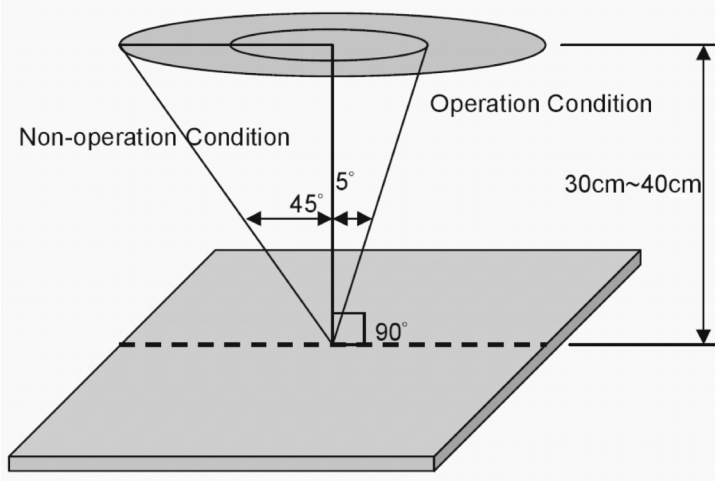

13.2.2 Environment Conditions :

Ambient Temperature		20°C~25°C
Ambient Humidity		65±20%RH
Ambient Illumination	Cosmetic Inspection	More than 600Lux
	Functional Inspection	300~500 Lux

13.2.3 Inspection lot
Quantity per delivery lot for each model

13.2.4 Inspection method
A sampling inspection shall be made according to the following provisions to judge The acceptability
(a)Applicable standard : MIL-STD-105E
Normal inspection, single sampling
Level Ⅱ
(b)AQL : Major defect : AQL 0.65
Minor defect : AQL 1.0

13.3 INSPECTION STANDARDS

13.3.1 VISUAL DEFECTS CLASSIFICATION

TYPE OF DEFECT	INSPECTION ITEM	DEFECT FEATURE	AQL
MAJOR DEFECT	1.DISPLAY ON	• DEFECT TO MISS SPECIFIED DISPLAY FUNCTION, FOR ALL AND SPECIFIED DOTS EX: DISCONNECTION, SHORT CIRCUIT ETC	0.65
	2.BACKLIGHT	• NO LIGHT • FLICKERING AND OTHER ABNORMAL ILLUMINATION	
	3.DIMENSIONS	• SUBJECT TO INDIVIDUAL ACCEPTANCE SPECIFICATIONS	
MINOR DEFECT	1.DISPLAY ZONE	• BLACK/WHITE SPOT • BUBBLES ON POLARIZER • NEWTON RING • BLACK/WHITE LINE • SCRATCH • CONTAMINATION • LEVER COLOR SPREED	1.0
	2.BEZEL ZONE	• STAINS • SCRATCHES • FOREIGN MATTER	
	3.SOLDERING	• INSUFFICIENT SOLDER • SOLDERED IN INCORRECT POSITION • CONVEX SOLDERING SPOT • SOLDER BALLS • SOLDER SCRAPS	
	4.DISPLAY ON (ALL ON)	• LIGHT LINE	

13.3.2 MODULE DEFECTS CALSSIFICATION

<table>
<tr><th>NO.</th><th>ITEM</th><th>CRITERIA</th></tr>
<tr><td>1.</td><td>DISPLAY ON INSPECTION</td><td>(1)INCORRECT PATTERN
(2)MISSING SEGMENT
(3)DIM SEGMENT
(4)OPERATING VOLTAGE BEYOND SPEC</td></tr>
<tr><td>2.</td><td>OVERALL DIMENSIONS</td><td>(1)OVERALL DIMENSION BEYOND SPEC</td></tr>
<tr><td>3.</td><td>DOT DEFECT</td><td>(1) INSPECTION PATTERN: FULL WHITE, FULL BLACK, RED, GREEN AND BLUE SCREENS.
(2)
<table>
<tr><th>ITEMS</th><th>ACCEPTABLE COUNT</th></tr>
<tr><td>BRIGHT DOT</td><td>N ≤ 2</td></tr>
<tr><td>DARK DOT</td><td>N ≤ 3</td></tr>
<tr><td>TOAL BRIGHT AND DARK DOTS</td><td>N ≤ 4</td></tr>
</table>
NOTE：
1. THE DEFINITION OF DOT：
THE SIZE OF A DEFECTIVE DOT OVER 1/2 OF WHOLE DOT IS REGARDED AS ONE DEFECTIVE DOT.
2. BRIGHT DOT：
DOTS APPEAR BRIGHT AND UNCHANGED IN SIZE IN WHICH LCD PANEL IS DISPLAYING UNDER BLACK PATTERN.
3. DARK DOT：
DOTS APPEAR DARK AND UNCHANGED IN SIZE IN WHICH LCD PANEL IS DISPLAYING UNDER PURE RED, GREEN, BLUE PICTURE.</td></tr>
<tr><td>4.</td><td>FOREIGN BLACK/WHITE/ BRIGHT LINE/ SCRATCH OF VIEWING AREA</td><td>
<table>
<tr><th>LENGTH：L</th><th>WIDTH：W</th><th>PERMISSIBLE NO.</th></tr>
<tr><td>L ≤ 0.3</td><td>W ≤ 0.05</td><td>IGNORE</td></tr>
<tr><td>0.3 < L ≤ 2.5</td><td>0.05 < W ≤ 0.1</td><td>4</td></tr>
<tr><td>2.5 < L</td><td>0.1 < W</td><td>NONE</td></tr>
</table>
WIDTH：W mm, LENGH： L mm</td></tr>
<tr><td>5.</td><td>FOREIGN MATTER \ BLACK SPOTS \ WHITE SPOTS \ DENT (INCLUDING LIGHT LEAKAGE DUE TO POLARIZING PLATES PINHOLES, ETC.)</td><td>
<table>
<tr><th>AVERAGE DIAMETER (mm): D</th><th>NUMBER OF PIECES PERMITTED</th></tr>
<tr><td>D ≤ 0.15</td><td>IGNORE</td></tr>
<tr><td>0.15 < D ≤ 0.5</td><td>4</td></tr>
<tr><td>0.5 < D</td><td>NONE</td></tr>
</table>
NOTE ：DIAMETER D=(a+b)/2
 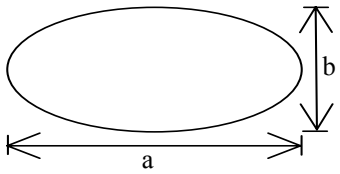
</td></tr>
</table>

<table>
<tr><th>NO.</th><th>ITEM</th><th>CRITERIA</th></tr>
<tr><td>6.</td><td>BUBBLES OF POLARIZER /DIRT/CF FAIL /SURFACE STAINS</td><td>
<table>
<tr><th></th><th>AVERAGE DIAMETER (mm)：D</th><th>NUMBER OF PIECES PERMITTED</th></tr>
<tr><td rowspan="3">BUBBLE ON THE POLARIZER</td><td>D ≤ 0.25</td><td>IGNORE</td></tr>
<tr><td>0.25 < D ≤ 0.5</td><td>N ≤ 5</td></tr>
<tr><td>0.5 < D</td><td>NOTE</td></tr>
<tr><td rowspan="2">SURFACE STATUS</td><td>D < 0.1 mm</td><td>IGNORE</td></tr>
<tr><td>0.1 < D ≤ 0.3mm</td><td>N ≤ 3</td></tr>
<tr><td rowspan="2">CF FAIL / SPOT</td><td>D < 0.1 mm</td><td>IGNORE</td></tr>
<tr><td>0.1 < D ≤ 0.3mm</td><td>N ≤ 3</td></tr>
</table>
NOTE : (1)POLARIZER BUBBLE IS DEFINED AS THE BUBBLE APPEARS ON ACTIVE DISPLAY AREA. THE DEFECT OF POLARIZER BUBBLE SHALL BE IGNORED IF THE POLARIZER BUBBLE APPEARS ON THE OUTSIDE OF ACTIVE DISPLAY AREA.
(2)THE EXTRANEOUS SUBSTANCE IS DEFINED AS IT CAN BE OBSERVED WHEN THE MODULE IS POWER ON.
(3)THE DEFINITION OF AVERAGE DIAMETER, D IS DEFINED AS FOLLOWING.
AVERAGE DIAMETER (D)=(a+b)/2
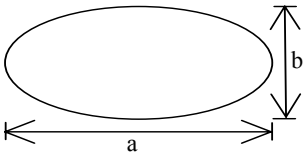

</td></tr>
<tr><td>7.</td><td>LINE DEFECT ON DISPLAY</td><td>OBVIOUS VERTICAL OR HORIZONTAL LINE DEFECT IS NOT ALLOW</td></tr>
<tr><td>8.</td><td>MURA ON DISPLAY</td><td>IT’S OK IF MURA IS SLIGHT VISIBLE THROUNG 6% ND FILTER</td></tr>
<tr><td>9.</td><td>UNEVEN COLOR SPREAD, COLORATION</td><td>(1)TO BE DETERMINED BASED UPON THE STANDARD SAMPLE.</td></tr>
<tr><td>10.</td><td>BEZEL APPEARANCE</td><td>(1)BEZEL MAY NOT HAVE RUST, BE DEFORMED OR HAVE FINGER PRINTS STAINS OF OTHER CONTAMINATION.
(2)BEZEL MUST COMPLY WITH JOB SPECIFICATIONS.</td></tr>
<tr><td>11</td><td>PCB</td><td>(1)THERE MAY NOT BE MORE THAN 2mm OF SEALANT OUTSIDE THE SEAL AREA ON THE PCB, AND THERE SHOULD BE NO MORE THAN THREE PLACES.
(2)NO OXIDATION OR CONTAMINATION PCB TERMINALS.
(3)PARTS ON PCB MUST BE THE SAME AS ON THE PRODUCTION CHARACTERISTIC CHART.
THERE SHOULD BE NO WRONG PARTS, MISSING PARTS OR EXCESS PARTS.
(4)THE JUMPER ON THE PCB SHOULD CONFORM TO THE PRODUCT CHARACTERISTIC CHART.
(5)IF SOLDER GETS ON BEZEL TAB PADS, LED PAD, ZEBRA PAD OR SCREW HOLD PAD; MAKE SURE IT IS SMOOTHED DOWN.</td></tr>
</table>

NO.	ITEM	CRITERIA
12.	SOLDERING	(1)NO SOLDERING FOUND ON THE SPECIFIED PLACE (2)INSUFFICENT SOLDER (a)LSI, IC A POOR WETTING OF SOLDER IS BETWEEN LOWER BEND OR "HEEL" OF LEAD AND PAD 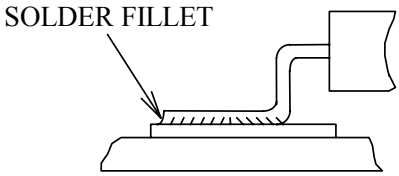 (b)CHIP COMPONENT · SOLDER IS LESS THAN 50% OF SIDES AND FRONT FACE WETTING 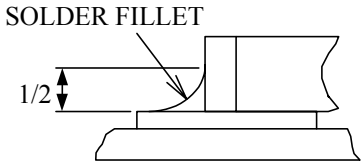 • SOLDER WETS 3 SIDES OF TERMINAL, BUT LESS THAN 25% OF SIDES AND FRONT SURFACE AREA ARE COVERED 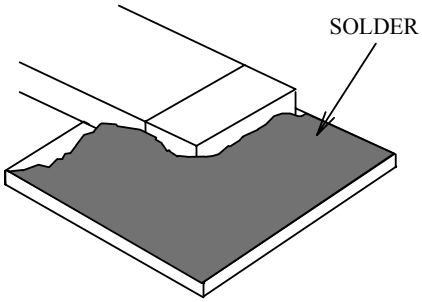 (3)PARTS ALIGMENT (a)LSI, IC LEAD WIDTH IS MORE THAN 50% BEYOND PAD OUTLINE 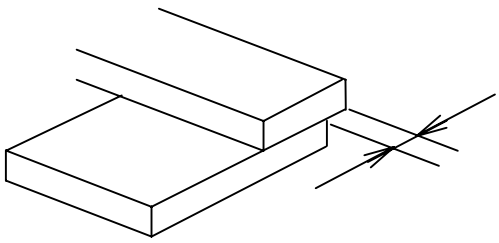

NO.	ITEM	CRITERIA
12.	SOLDERING	(b)CHIP COMPONENT COMPONENT IS OFF CENTER, AND MORE THAN 50% OF THE LEADS IS OFF THE PAD OUTLINE 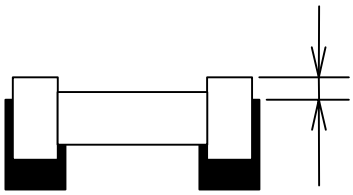 (4)NO UNMELTED SOLDER PASTE MAY BE PRESENT ON THE PCB. (5)NO COLD SOLDER JOINTS, MISSING SOLDER CONNECTIONS, OXIDATION OR ICICLE. (6)NO RESIDUE OR SOLDER BALLS ON PCB. (7)NO SHORT CIRCUITS IN COMPONENTS ON PCB.
13.	BACKLIGHT	(1)NO LIGHT (2)FLICKERING AND OTHER ABNORMAL ILLUMINATION (3)SPOTS OR SCRATCHES THAT APPEAR WHEN LIT MUST BE JUDGED USING LCD SPOT, LINES AND CONTAMINATION STANDARDS. (4)BACKLIGHT DOESN'T LIGHT OR COLOR IS WRONG.
14.	GENERAL APPEARANCE	(1)NO OXIDATION, CONTAMINATION, CURVES OR, BENDS ON INTERFACE PIN (OLB) OF TCP. (2)NO CRACKS ON INTERFACE PIN (OLB) OF TCP. (3)NO CONTAMINATION, SOLDER RESIDUE OR SOLDER BALLS ON PRODUCT. (4)THE IC ON THE TCP MAY NOT BE DAMAGED, CIRCUITS. (5)THE UPPERMOST EDGE OF THE PROTECTIVE STRIP ON THE INTERFACE PIN MUST BE PRESENT OR LOOK AS IF IT CAUSE THE INTERFACE PIN TO SEVER. (6)THE RESIDUAL ROSIN OR TIN OIL OF SOLDERING (COMPONENT OR CHIP COMPONENT) IS NOT BURNED INTO BROWN OR BLACK COLOR. (7)SEALANT ON TOP OF THE ITO CIRCUIT HAS NOT HARDENED. (8)PIN TYPE MUST MATCH TYPE IN SPECIFICATION SHEET. (9)LCD PIN LOOSE OR MISSING PINS. (10)PRODUCT PACKAGING MUST THE SAME AS SPECIFIED ON PACKAGING SPECIFICATION SHEET. (11)PRODUCT DIMENSION AND STRUCTURE MUST CONFORM TO PRODUCT SPECIFICATION SHEET. (12)THE APPEARANCE OF HEAT SEAL SHOULD NOT ADMIT ANY DIRT AND BREAK.

NO.	ITEM	CRITERIA
15.	CRACKED GLASS	THE LCD WITH EXTENSIVE CRACK IS NOT ACCEPTABLE

GENERAL GLASS CHIP：

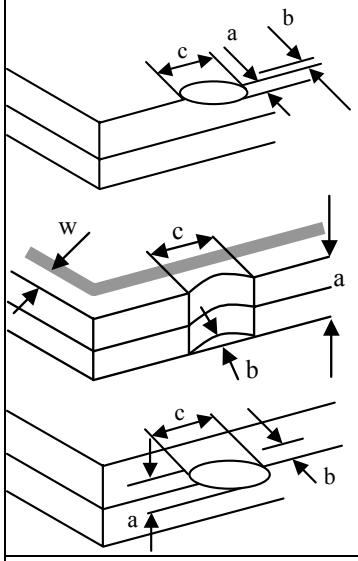

a	b	c
≤ t/2	< VIEWING AREA	≤ 1/8X
t/2 > , ≤ 2t	≤ W/2	≤ 1/8X

*W=DISTANCE BETWEEN SEALANT AREA AND LCD PANEL EDGE
X = LCD SIDE LENGTH
t = GLASS THICKNESS

CORNER PART：

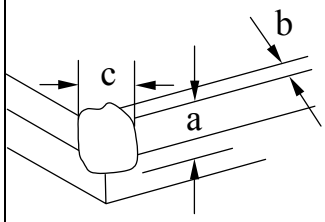

a	b	c
≤ t/2	< VIEWING AREA	≤ 1/8X
> t/2 , ≤ 2t	≤ W/2	≤ 1/8X

*W=DISTANCE BETWEEN SEALANT AREA AND LCD PANEL EDGE
X = LCD SIDE LENGTH
t = GLASS THICKNESS

CHIP ON ELECTRODE PAD

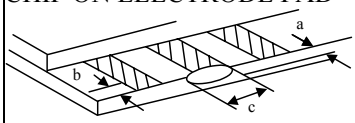

a	b	c
≤ t	≤ 0.5mm	≤ 1/8X

* X=LCD SIDE WIDTH
t =GLASS THICKNESS

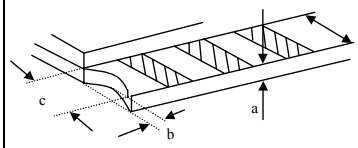

a	b	c
≤ t	≤ 1/8X	≤ L

*X=LCD SIDE WIDTH
t = GLASS THICKNESS
L=ELECTRODE PAD LENGTH
①IF GLASS CHIPPING THE ITO TERMINAL, OVER 2/3 OF THE ITO MUST REMAIN AND BE, INSPECTED ACCORDING TO ELECTRODE TERMINAL SPECIFICATIONS
②IF THE PRODUCT WILL BE HEAT SEALED BY THE CUSTOMER, THE ALIGNMENT MARK MUST NOT BE DEMAGED

13.4 RELIABILITY TEST

13.4.1 STANDARD SPECIFICATIONS FOR RELIABILITY OF LCD MODULE

NO	ITEM	DESCRIPTION
1	High temperature operation	The sample should be allowed to stand at +70°C for 240 hrs
2	Low temperature operation	The sample should be allowed to stand at -20°C for 240 hrs
3	High temperature storage	The sample should be allowed to stand at +80°c for 240 hrs
4	Low temperature storage	The sample should be allowed to stand at -30°C for 240 hrs
5	High temp / humidity test storage	The sample should be allowed to stand at 60°C , 90% RH 240 hrs
6	Thermal shock (not operated)	The sample should be allowed to stand the following 10 cycles of operation: -40°c for 30 minutes ~ +80°c for 30 minutes
7	ESD (Electrostatic Discharge) (not operated)	AIR DISCHARGE ± 12KV CONTACT DISCHARGE ± 8KV

NOTE (1) : THE TEST SAMPLES HAVE RECOVERY TIME FOR 2 HOURS AT ROOM TEMPERATURE BEFORE THE FUNCTION CHECK. IN THE STANDARD CONDITIONS, THERE IS NO DISPLAY FUNCTION NG ISSUE OCCURRED.

13.5 TESTING CONDITIONS AND INSPECTION CRITERIA

For the final test the testing sample must be stored at room temperature for 24 hours, after the tests listed in table 13.5 , standard specifications for reliability have been executed in order to ensure stability .

NO	ITEM	TEST MODEL	INSPECTION CRITERIA
1	Current consumption	Refer To Specification	The current consumption should conform to the product specification.
2	Contrast	Refer To Specification	After the tests have been executed, the contrast must be larger than half of its initial value prior to the tests.
3	Appearance	Visual inspection	Defect free

13.6 OPERATION

13.6.1 Do not connect or disconnect modules to or from the main system while power is being supplied .

13.6.2 Use the module within specified temperature ; lower temperature causes the retardation of blinking speed of the display ; higher temperature makes overall display discolor . When the temperature returns to normality , the display will operate normally .

13.6.3 Adjust the LC driving voltage to obtain the optimum contrast .

13.6.4 Power On Sequence input signals should not be supplied to LCD module before power supply voltage is applied and reaches the specified value .
If above sequence is not followed , CMOS LSIs of LCD modules may be damaged due to latch - up problem .

13.6.5 Not allowed to inflict any external stress and to cause any mechanical interference on the bending area of FPC during the tail bending backwards!
Do NOT stress FPC and IC on the Module!

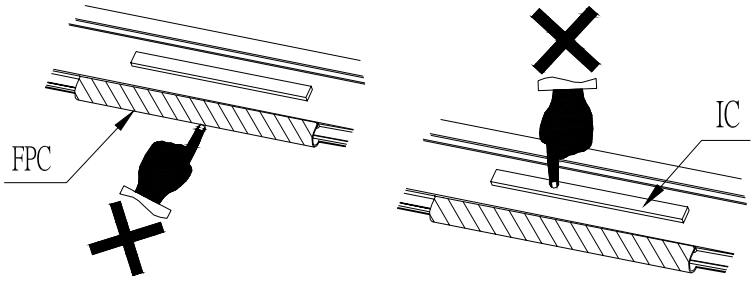

13.7 NOTICE

13.7.1 Use a grounded soldering iron when soldering connector I/O terminals . For soldering or repairing , take precaution against the temperature of the soldering iron and the soldering time to prevent peeling off the through-hole-pad .

13.7.2 Do not disassemble . EDT shall not be held responsible if the module is disassembled and upon the reassembly the module failed .

13.7.3 Do not charge static electricity , as the circuit of this module contains CMOS LSIs. A workman's body should always be static-protected by use ofan ESD STRAP . Working clothes for such personnel should be of static-protected material .

13.7.4 Always ground the electrically-powered driver before using it to install the LCD module. While cleaning the work station by vacuum cleaner, do not bring the sucking mouth near the module ; static electricity of the electrically-powered driver or the vacuum cleaner may destroy the module .

13.7.5 Don’t give external shock.

13.7.6 Don’t apply excessive force on the surface.

13.7.7 Liquid in LCD is hazardous substance. Must not lick and swallow. When the liquid is attach to your, skin, cloth etc. Wash it out thoroughly and immediately.

13.7.8 Don’t operate it above the absolute maximum rating.

13.7.9 Storage in a clean environment, free from dust, active gas, and solvent.

13.7.10 Store without any physical load.

13.7.11 Rewiring: no more than 3 times.