SHEET OF

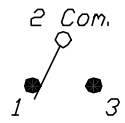

CIRCUIT: SPDT

CONTACT CONFIGURATION

SWITCH FUNCTION		
POS. 1	POS. 2	POS. 3
ON	OFF	ON
2-3	OPEN	2-1

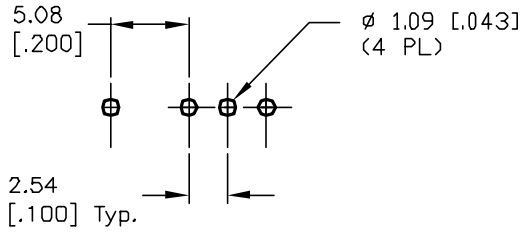

RECOMMENDED P.C.B. LAYOUT

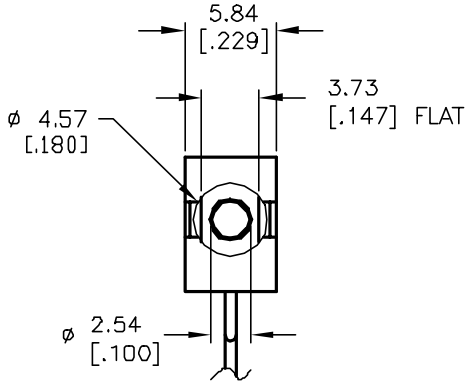

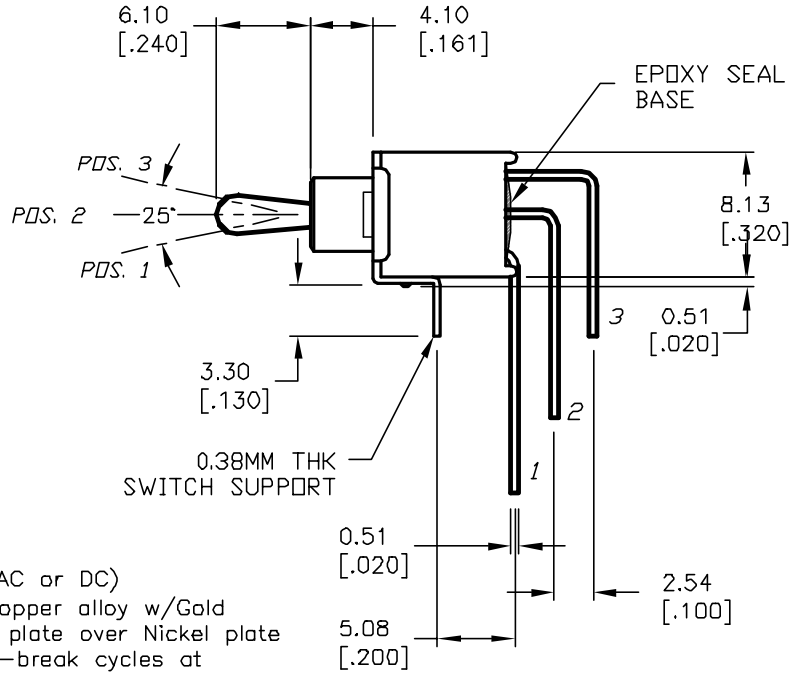

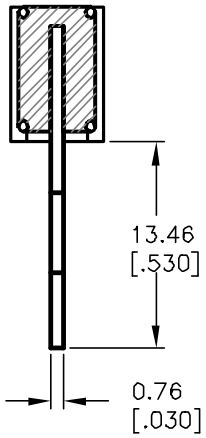

NOTES:

1. ALL DIMENSIONS IN MM [INCH]
2. GENERAL TOLERANCE: X.X=±0.4
   X.XX=±0.25
3. TERM. NOS. FOR REF. ONLY
4. RATING: 0.4(VA) max. @20V max. (AC or DC)
5. FIXED TERM. & MOVING CONTACT: Copper alloy w/Gold plate over Nickel plate
6. ELECTRICAL LIFE: 50,000 make-and-break cycles at full load.
7. INSULATION RESISTANCE: 1000M ohm min.
8. DIELECTRIC STRENGTH: 1000V RMS min. @sea level.
9. OPERATING TEMP.: -30°C to 85°C

REV.	ECN No.	DESCRIPTION	DATE	CHKD
A	12164	RELEASED FOR PRODUCTION	5/20/01	CJB

THE INFORMATION CONTAINED IN THIS DOCUMENT IS PROPRIETARY TO E-SWITCH AND IS NOT TO BE COPIED OR TRANSFERRED

E-SWITCH®

TITLE 200A WSP-3 T2 A1 M7 R E

SCALE	DATE	DR	DWG	REV
2:1	5/20/02	CJB	T201234	A