SHEET OF

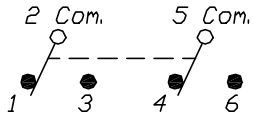

CIRCUIT: DPDT
CONTACT CONFIGURATION

SWITCH FUNCTION		
POS. 1	POS. 2	POS. 3
ON	NONE	ON
2-3,5-6	OPEN	2-1,5-4

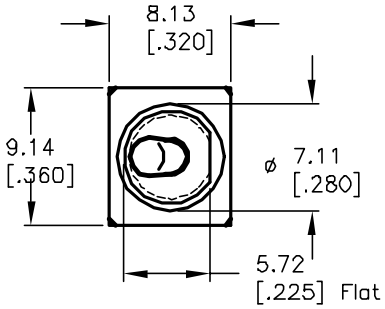

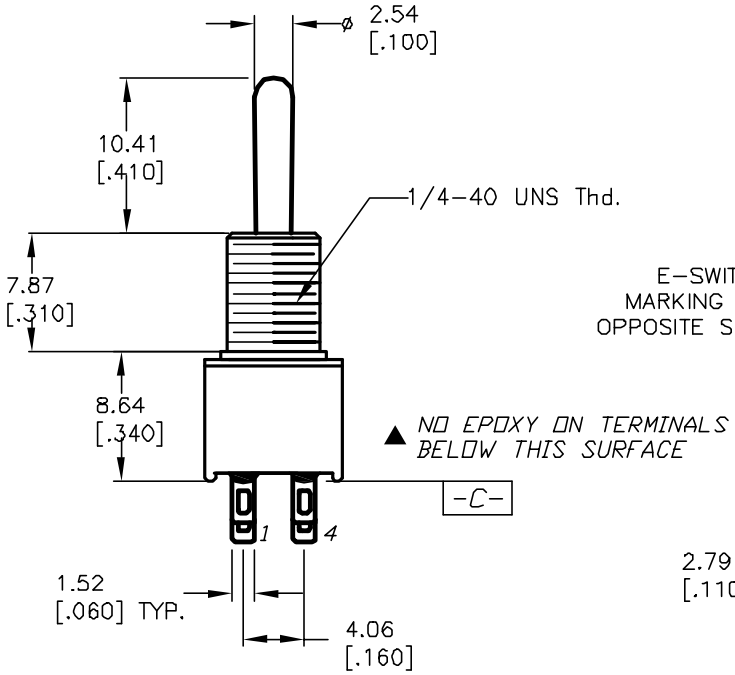

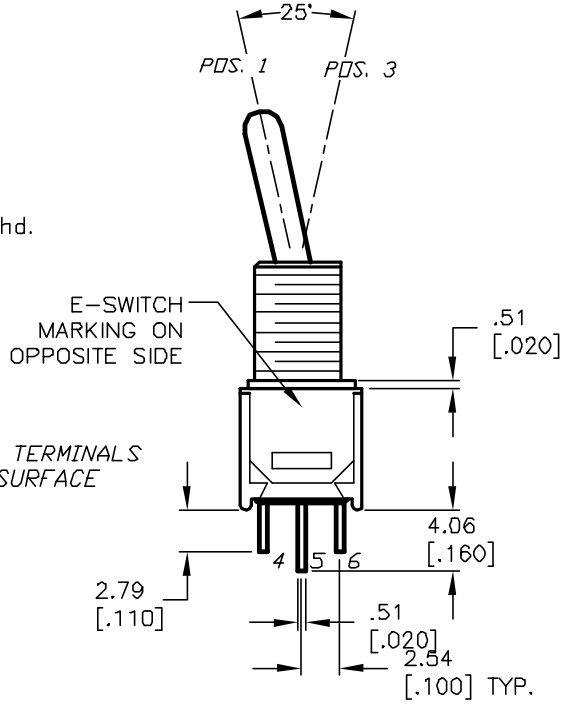

NOTES:

1. ALL DIMENSIONS IN MM [INCH]
2. GENERAL TOLERANCE: X.X=±0.4
   X.XX=±0.25
3. TERM. NOS. FOR REF. ONLY
4. CONTACT RATING: 3A @120VAC or 28VDC;
   1A @250VAC
5. FIXED TERMINAL & MOVING CONTACT:
   Copper alloy w/Silver plate.
6. ELECTRIC LIFE: 30,000 make-and-break cycles
   at full load.
7. INSULATION RESISTANCE: 1,000 M ohm min.
8. DIELECTRIC STRENGTH: 1,000 V RMS @sea level.
9. OPERATING TEMP.: -30°C to 85°C

▲ 10. DESIGNATE MAJOR FEATURE:

REV.	ECN No.	DESCRIPTION	DATE	CHKD
A	11636	RELEASED FOR PRODUCTION	8/31/01	CJB

THE INFORMATION CONTAINED IN THIS DOCUMENT IS PROPRIETARY TO E-SWITCH AND IS NOT TO BE COPIED OR TRANSFERRED

E-SWITCH®

TITLE 200 MDP-1 T4 B5 M1 Q E

SCALE	DATE	DR	DWG	REV
2:1	8/31/01	CJB	T221031	A