±1°C Remote and Local Temperature Sensor with SMBus Serial Interface

Features

- **Two Channels: Measures Both Remote and Local Temperatures**
- **No Calibration Required**
- **Built-in Noise-Buster for Remote Sensor**
- **SMBus 2-Wire Serial Interface**
- **Programmable Under/Overtemperature Alarms**
- **Supports SMBus Alert Response**
- **Accuracy:**
  ±1°C (+60°C to +100°C, remote)
  ±3°C (+60°C to + 100°C, local)
- **320µA (typ) Average Supply Current During Conversion**
- **+3V to +5.5V Supply Range**
- **Small 8-Lead SOP and MSOP Package**
- **Remote Temperature Measurment up to 160°C by using offset shifting method (see "Measure Remote Temperature Higher Than 127°C" section)**

Applications

Desktop and Notebook Computers
Smart Battery Packs
LAN Servers
Industrial Controllers
Central Office Telecom Equipment
Test and Measurement
Multi-Chip Modules

General Description

The G786 is a precise digital thermometer that reports the temperature of both a remote sensor and its own package. The remote sensor is a diode-connected transistor typically a low-cost, easily mounted 2N3904 NPN type that replace conventional thermistors or thermocouples. Remote accuracy is ±1°C with no calibration needed. It also has a build-in noise filtering function in remote sensor measuring the diode temperature. The remote channel can also measure the die temperature of other ICs, such as microprocessors, that contain an on-chip, diode-connected transistor.

The 2-wire serial interface accepts standard System Management Bus (SMBus) Write Byte, Read Byte, Send Byte, and Receive Byte commands to program the alarm thresholds and to read temperature data. The data format is 11bits plus sign, with each bit corresponding to 0.125°C, in two's-complement format. Measurements can be done automatically and autonomously, with the conversion rate programmed by the user or programmed to operate in a single-shot mode. The adjustable rate allows the user to control the supply current drain.

The G786 and G786-1 have the same functions but different SMBus slave addresses. This allows for one of each to be on the bus at the same time.

The G786 is available in a small, 8-pin SOP and MSOP surface-mount package.

Ordering Information

ORDER NUMBER	MARKING	TEMP. RANGE	PACKAGE (Green)
G786P11U	G786	-55°C to +125°C	SOP-8
G786P81U	G786	-55°C to +125°C	MSOP-8
G786-1P81U	G786-1	-55°C to +125°C	MSOP-8

Note:P1:SOP-8 P8:MSOP-8
1: Bonding Code
U: Tape & Reel

Pin Configuration

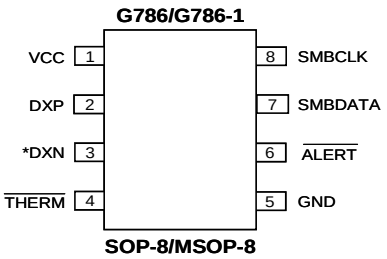

*: DXN : DXN is internally connected to GND.
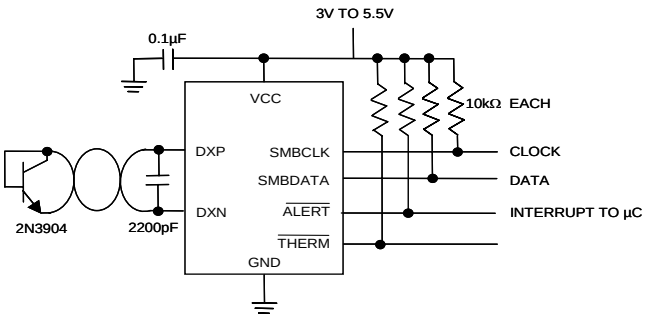
Typical Application Circuit