Verpackt in Gurtverpackung - *Tape on Reel Packaging*
Verpackungseinheit: 670 Stück - *Packaging unit: 670 pcs*

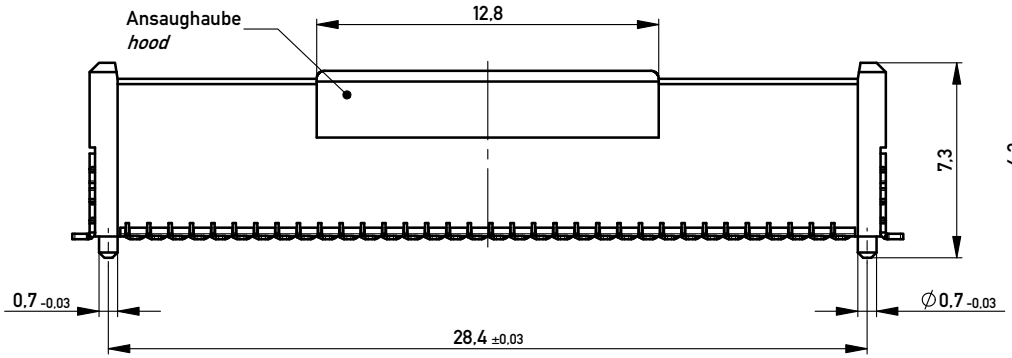

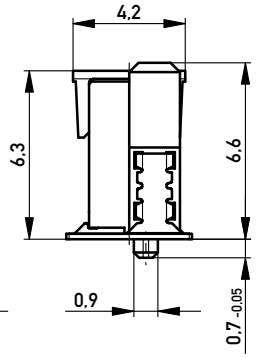

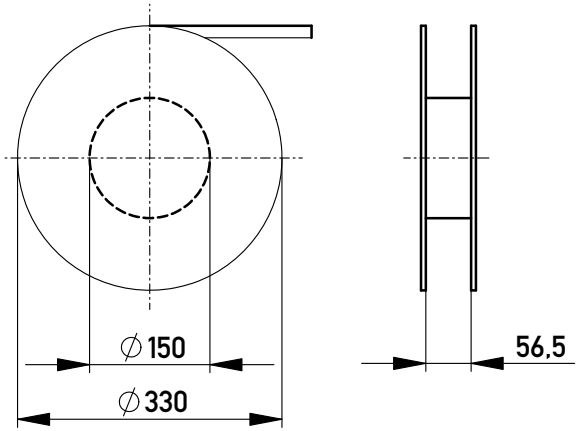

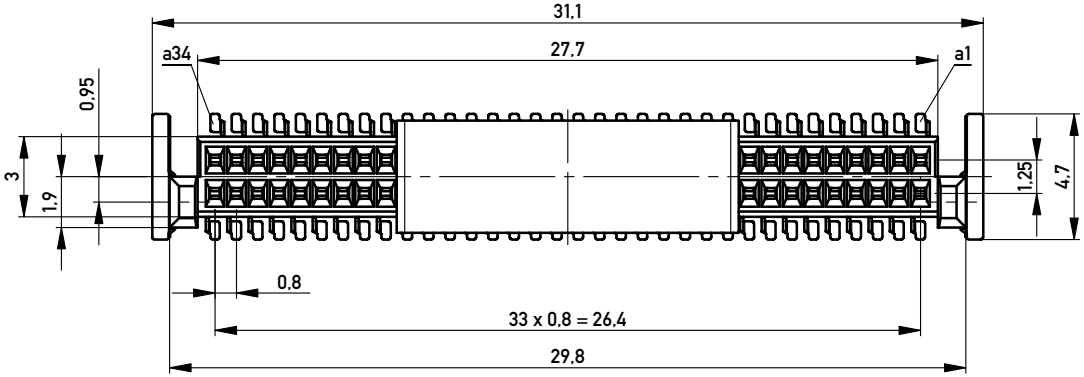

Abspulrichtung - *Reel off Direction*

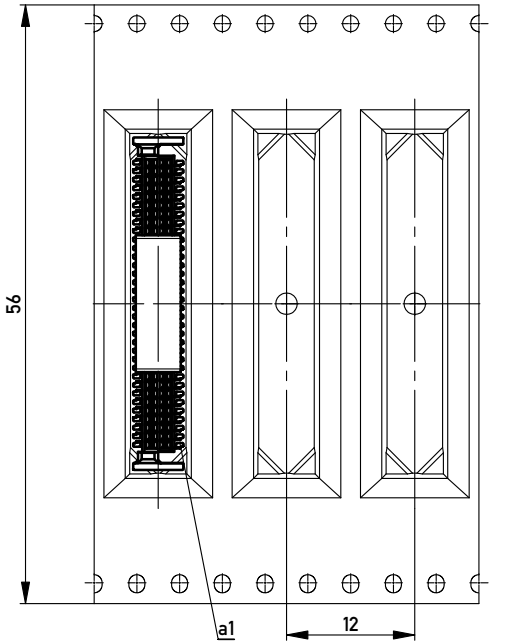

ohne Ansaughaube - *without hood*

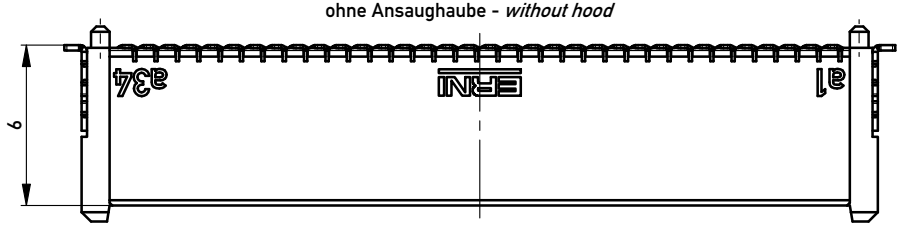

Anforderungsstufe 2
Performance Level 2

Kontaktbereich vergoldet
Mating Area gold plating

Anschlussbereich verzinnt 4-6 µm
Terminal Area 4-6 µm tin plating

Koplanarität der Anschlüsse ≤ 0,1 mm
Coplanarity Area of Termination ≤ 0,1 mm

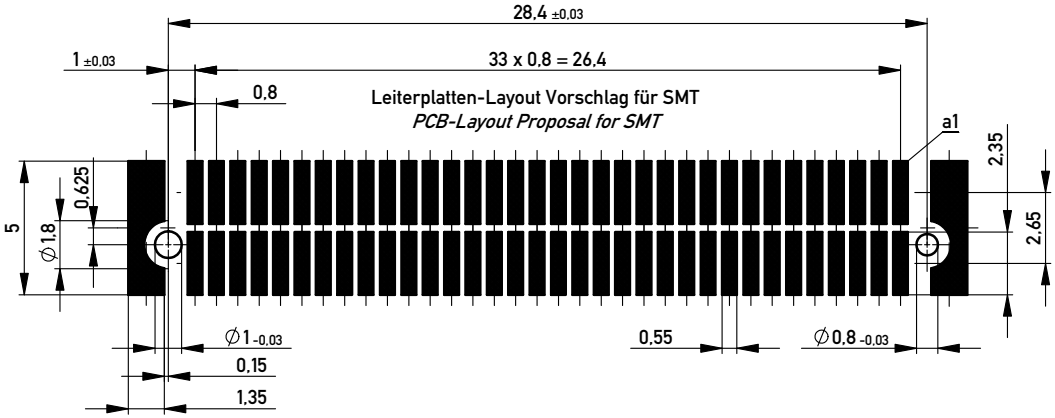

Information:	Tolerances	All Dimensions in mm	Scale 5:1
All rights reserved. Only for Information. To ensure that this is the latest version of this drawing, please contact one of the ERNI companies before using.	Subject to modification without prior notice. Drawing will not be updated.		Designation: 0,8 DRC-B, F 6mm, 68 polig / *0,8 DRC-B, F 6mm, 68 pin*
		ERNI www.ERNI.com	294019 — I — A3
Index	Date		Class DRCB

Copyright by ERNI GmbH
Proprietary notice pursuant to ISO 16016 to be observed.