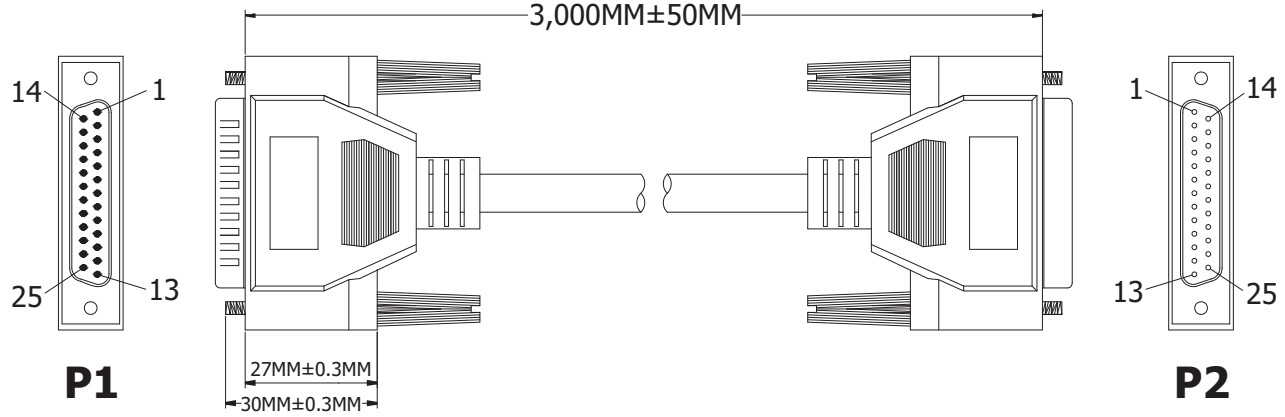

Pin Assignment

P1	P2
1	1
2	2
3	3
4	4
22	22
23	23
24	24
25	25
SHELL	SHELL

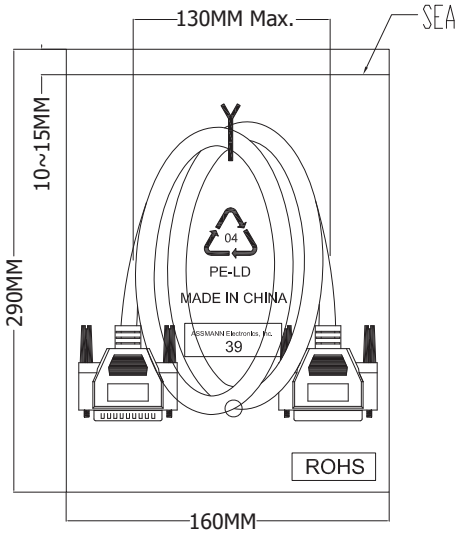

Material:

- Cable: NOUL 30#(7/0.10)*25C+D+AL/MY
  O.D.: 6.5MM
- Connectors-
  P1: DB 25P Male Soder Type Pin G/F Shell NI-Plated (Insulator: Blue)
  P2: DB 25P Female Soder Type Pin G/F Shell NI-Plated (Insulator: Blue)
- Outer Jacket: 40P PVC
- Inner Jacket: Clear LD-PE
- Screw: #4-40UNC Type L=30MM, Nickel Plated
- Color: Beige
- Operating Temperature: 0°C ~ 60°C

Electrical:

- 100% short, open, miswire test
- Conduct resistance: 2Ω Max.
- Insulation resistance: 5MΩ Min.
- Dielectric Test: 300V DC

RoHS Complaint

Scale	1:1
TOLERANCE	
X.X	±0.40
X.XX	±0.25
X.XXX	±0.15
Angle	±3°

Modification	Date	Name

		Name
Drawn	11.14.11	Chappell
Approved		

ASSMANN WSW components

Item No.

AK166-3-R

Title: Serial / Parallel Extension Cable, D-Sub 25 Pin Male <=> D-Sub 25 Pin Female, 3 Meters

Drawing No.

rev00

Replace

Sheet