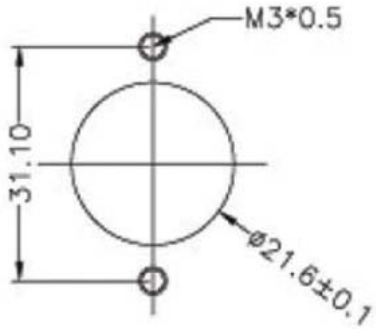

Recommended Paine Cut-Out

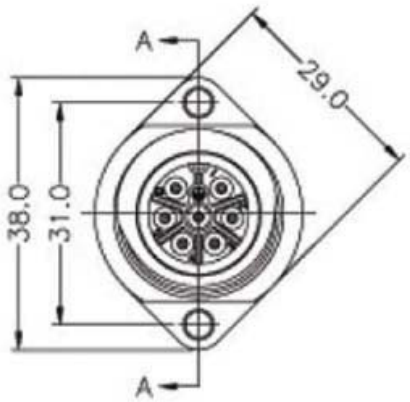

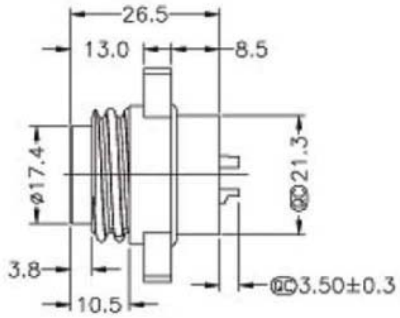

Pin Assignments
Front View

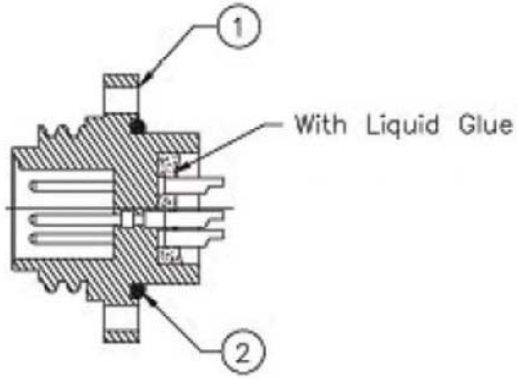

Section A–A

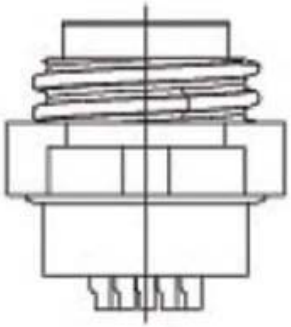

Material:

- Waterproof Rate: IP67
- Housing: Black ABS Plastic
- Connector: Black, Nylon+GF
- Pin: Copper Alloy, Gold Plated
- Contacts: Gold Plating
- Operating temperature: -40°C to +105°C

Electrical:

- Current RatingL 8A, 12A, 20A
- Contact Resistance: ≤ 20MΩ
- Insulation Resistance: ≥ 100MΩ @ 250V DC
- Durability: 1,000 Times
- Breakdown Voltage: ≥ 1,000V / 1 Minute

RoHS Complaint

Scale	1:1
TOLERANCE	
X.X	±0.40
X.XX	±0.25
X.XXX	±0.15
Angle	±3°

Modification	Date	Name

		Name
Drawn	12.01.11	Chappell
Approved		

ASSMANN WSW components

Item No.
A-P07PMMS-SC-WP-R

Title
Waterproof Power Connector 7 Pin (8A), Male, Panel Mount

Drawing No.

rev00

Replace

Sheet