Rev	AWO #	Description	Date	Appr
-		RELEASED	9/25/09	
A		REVISED PIN VIEW	10/19/09	

APPROVED: _____

DATE: _____ TITLE: _____

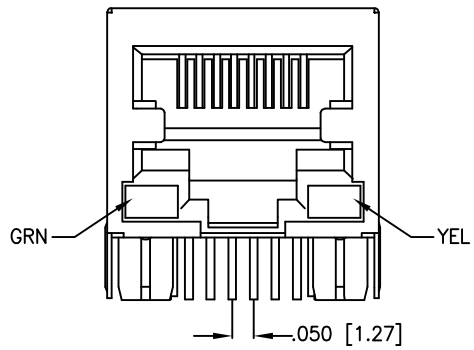

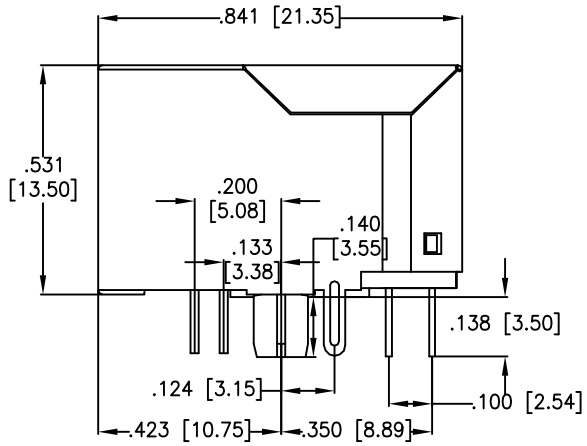

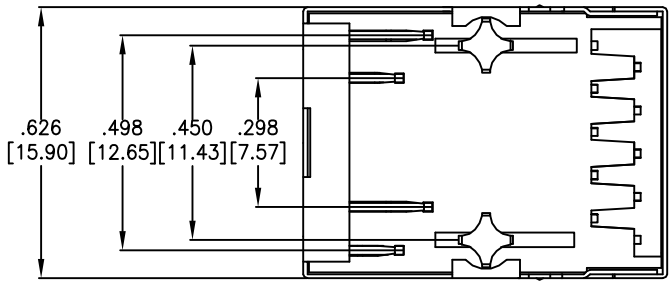

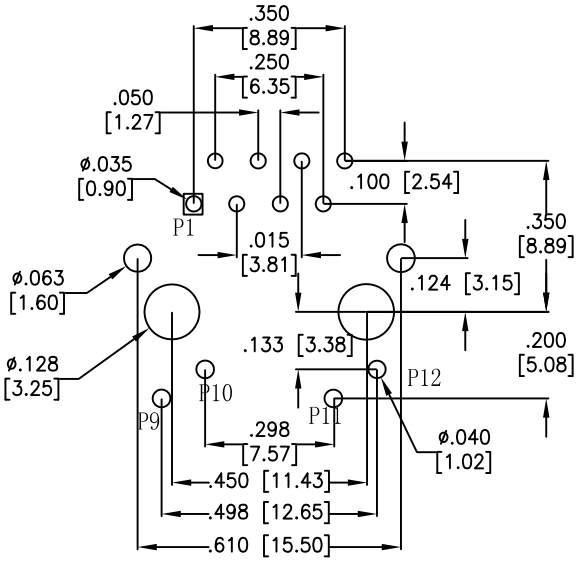

RECOMMENDED PCB LAYOUT
(COMPONENT SIDE)

SPECIFICATIONS:

Material:

Insulator: PBT, glass reinforced , thermoplastic, rated UL 94V–0
Insulator color: Black
Contacts: Copper Alloy
Shield: Copper Alloy, Nickel plated

Contact Plating:

Gold Flash over Nickel underplate on contact area,
Tin over Copper underplate on tails
(See chart for thickness).

Electrical:

Operating voltage: 150 VAC max
Current rating: 1.5 Amps max
Contact Resistance: 20 mohms max. initial
Insulation resistance: 500 Mohms min @ 500 VDC
Dielectric withstanding voltage: 1000 VAC for 1 minut

Temperature Rating:

Operating temperature: –40˚C to +125˚C

Environmental:

Lead free, RoHS compliant.
Recommended soldering temp: 235˚C for 5 sec.

RoHS COMPLIANT

X	PLATING
0	15 µin Gold
1	30 µin Gold
2	50 µin Gold

UNLESS OTHERWISE SPECIFIED
ALL DIMENSIONS ARE INCHES [MM]
TOLERANCES: EXCEPT AS NOTED

INCHES		HOLES	
.X	± .10	Ø.X	±.10
.XX	± .020	Ø.XX	±.015
.XXX	± .015	Ø.XXX	±.010

APPROVALS		DATE
DRAWN	DY	9/25/09
CHECKED		
APPROVED		

ADAM TECH
909 Rahway Avenue, Union, NJ 07083
Phone: 908-687-5000 Fax: 908-687-5710

TITLE: MODULAR JACK GANGED, 1 PORT, 8P8C W/LED1 GREEN, LED2 YELLOW

SIZE	PART NO.	REV.
X	MTJ-88TX1-FSZ-D1LH-M3	A

REF: S00005C | SCALE: NTS | SHEET 1 OF 2