SHEET OF

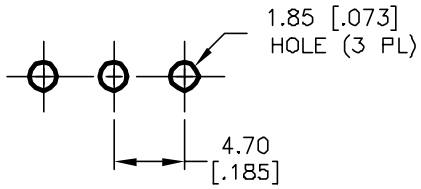

RECOMMENDED P.C.B. LAYOUT

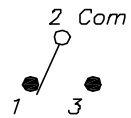

CIRCUIT: SPDT

SWITCH FUNCTION		
POS. 1	POS. 2	POS. 3
ON	NONE	(ON)
2-3	OPEN	2-1

( )=Momentary

NOTES:

1. ALL DIMENSIONS IN MM [INCH]
2. GENERAL TOLERANCE: X.X=±0.4
   X.XX=±0.25
3. TERM. NOS. FOR REF. ONLY
4. RATING: 5A @120VAC or 28VDC;
   2A @250VAC
5. FIXED TERMINAL/MOVING CONTACT:
   Copper Alloy W/Silver Plate.
6. ELECTRICAL LIFE: 50,000 make-and-break
   cycles at full load.
7. INSULATION RESISTANCE: 1,000M ohm min.
8. DIELECTRIC STRENGTH: 1000V RMS @sea level
9. OPERATING TEMP.: -30°C to +85°C

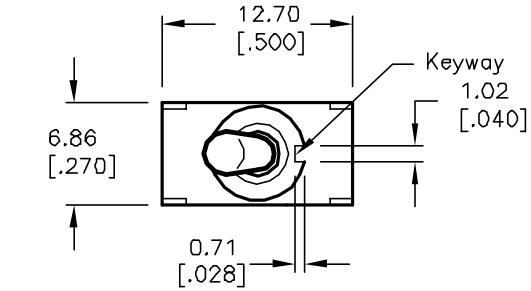

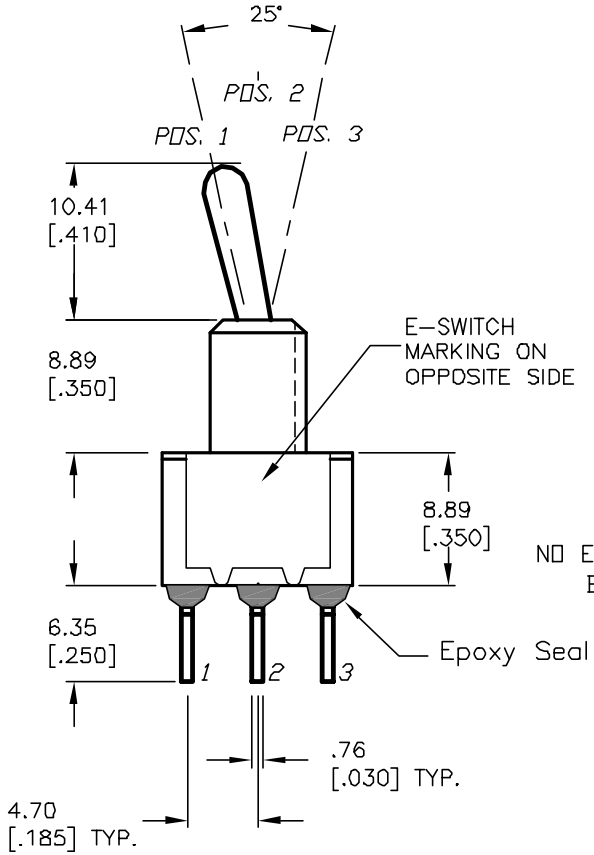

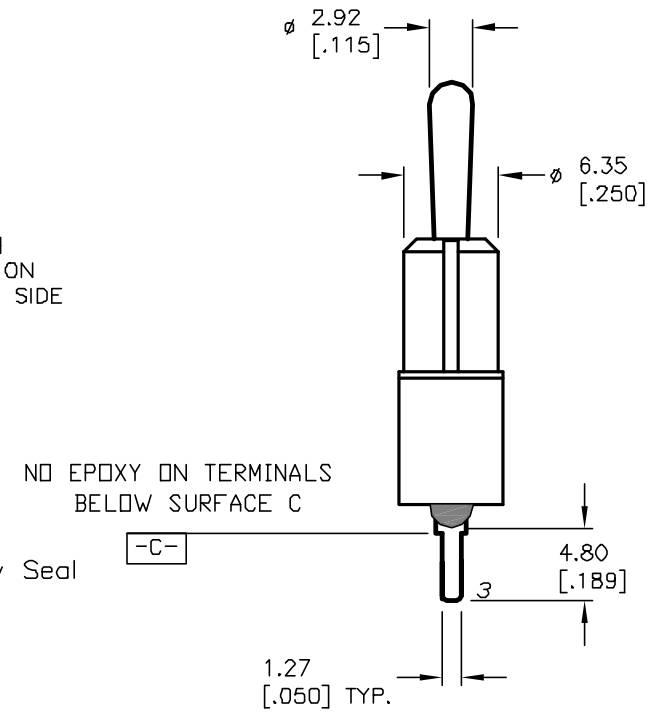

REV.	ECN No.	DESCRIPTION	DATE	CHKD
A	12598	RELEASED FOR PRODUCTION	11/27/02	CJB

THE INFORMATION CONTAINED IN THIS DOCUMENT IS PROPRIETARY TO E-SWITCH AND IS NOT TO BE COPIED OR TRANSFERRED

E-SWITCH®

TITLE 100 SP-2 T1 B2 M2 Q E

SCALE	DATE	DR	DWG	REV
2:1	11/27/02	CJB	T112022	A