Part Number: 62201-8646

Status: Active

Description: Daughter Card Module Installation Press-In Tool for 3-Pair by 10-Column Assemblies

Documents:
RoHS Certificate of Compliance (PDF)

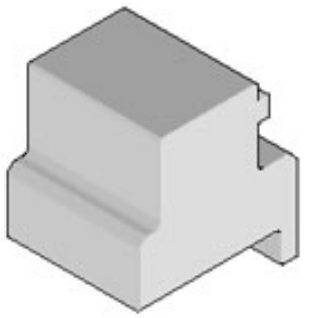

Series

image - Reference only

General

Product Family	Application Tooling
Series	T9999
Comments	See Tooling Specification (PDF) Above, Press-In Tool
Function	Insertion
Geographic Area	Global
Level of Automation	Manual
More Detailed Tech Information	applicationtooling@molex.com
Product Name	Impact™
Survey	www.molex.com//review/apptool_survey.html
Tool Type	Handtool
UPC	883906116057

Material Info

Reference - Drawing Numbers

Application Tooling Documents	ATS-622018646, TM-622018799

EU RoHS
ELV and RoHS Compliant
REACH SVHC
Not Reviewed
Low-Halogen Status
Not Reviewed

China RoHS

Need more information on product environmental compliance?

Email productcompliance@molex.com
For a multiple part number RoHS Certificate of Compliance, click here

Please visit the Contact Us section for any non-product compliance questions.

Search Parts in this Series
T9999Series

Use With
Impact™ Daughtercard Signal Module Assembly, 76170 Series