LinkCom Manufacturing Co., Ltd

Model NO.	LSP200224001	Model Name	LED Power Supply
Part NO.	PLSP200224001	SIZE	130.7 * 31.1 * 24.7 mm 【5.15 * 1.22 * 0.97 inch】

FEATURES

- ◆ AC Input 90~264Vac
- ◆ Protection: SCP / OVP / OCP
- ◆ High Operating ambient Temp: -20℃ ~ +60℃
- ◆ Safety: UL / TUV / CB / PSE
- ◆ EMC: CE
- ◆ Comply with Indoor/Outdoor Waterproof (IP 67)
- ◆ Dimension (L*W*H): 130.7 * 31.1 * 24.7 mm
- ◆ Dimension (L*W*H): 5.15 * 1.22 * 0.97 inch
- ◆ ROHS Compliant

Module : LSP200224001 ***,# =SEE NOTES BELOW**

*(9)	MODEL / SPECIFICATION	LSP200224001		
		min.	nrom.	max.
	DC OUTPUT VOLTAGE (V)	18		24
*	PRESET ACCURACY (%) *(8)		1	
*	OUTPUT CURRENT(A) *(5)		0.8	
*	O/P NOISE (P-P, mV) *(3)			240
*	LINE REGULATION (%) *(7)		3	
*	LOAD REGULATION (%) *(6)		3	
	DC OUTPUT POWER	19.2 W		
	EFFICIENCY(typ @Full Load)	80%		
	INPUT VOLTAGE RANGE	90-264VAC, 127-373VDC, Normal：100-240VAC		
	INPUT FREQUENCY	Range:47-63Hz, Normal：50-60Hz		
	INRUSH CURRENT (typ)	COLD START 50A @ 230VAC		
	AC CURRENT	0.6A/100VAC		
	SHORT CIRCUIT PROTECTION	short circuit protection will restart automatically after the fault condition is removed		
	OVER CURRENT PROTECTION	Constant Current		
	OVER V, PROTECTION	Shut down and latch off o/p voltage , re-power on to recover		
*	OPERATING TEMP.*(4)	-20 to +60℃@full load		
	STORAGE TEMPERATURE	-40 to +80℃		
	RELATIVE HUMIDITY	10 to +90%, non-cond.		
	TEMP. COEFFICIENT	0.03% / ℃ (0-50℃, typ)		
	SAFETY	UL 1310 / TUV EN61347-2-13 / CB / PSE		
	EMI	CE EN55022		
	DIMENSIONS(L*W*H)	130.7 * 31.1 * 24.7 mm【5.15 * 1.22 * 0.97 inch】		

NOTES：(1)All parameters not specially mentioned are measured 230VAC input.
(2)All specifications Typical @25℃, unless otherwise noted, at normal line and load.
(3)Ripple and Noise measured directly at pins/terminals at nom. load, 0.1uF bypass and 47uF electrolytic, pk-pk @20MHz bandwidth.
(4)Specified for free-air convection cooling.
(5)Minimum load is NOT required for proper operation .
(6)Load regulation measured from 20% to Full load.
(7)Line regulation measured from 100VAC to 240VAC.
(8)Preset accuracy measured at normal load, 120VAC input.
(9)100% Production Tested.

Model NO.	LSP200224001	Model Name	LED Power Supply
Part NO.	PLSP200224001	SIZE	130.7 * 31.1 * 24.7 mm 【5.15 * 1.22 * 0.97 inch】

Dimensions

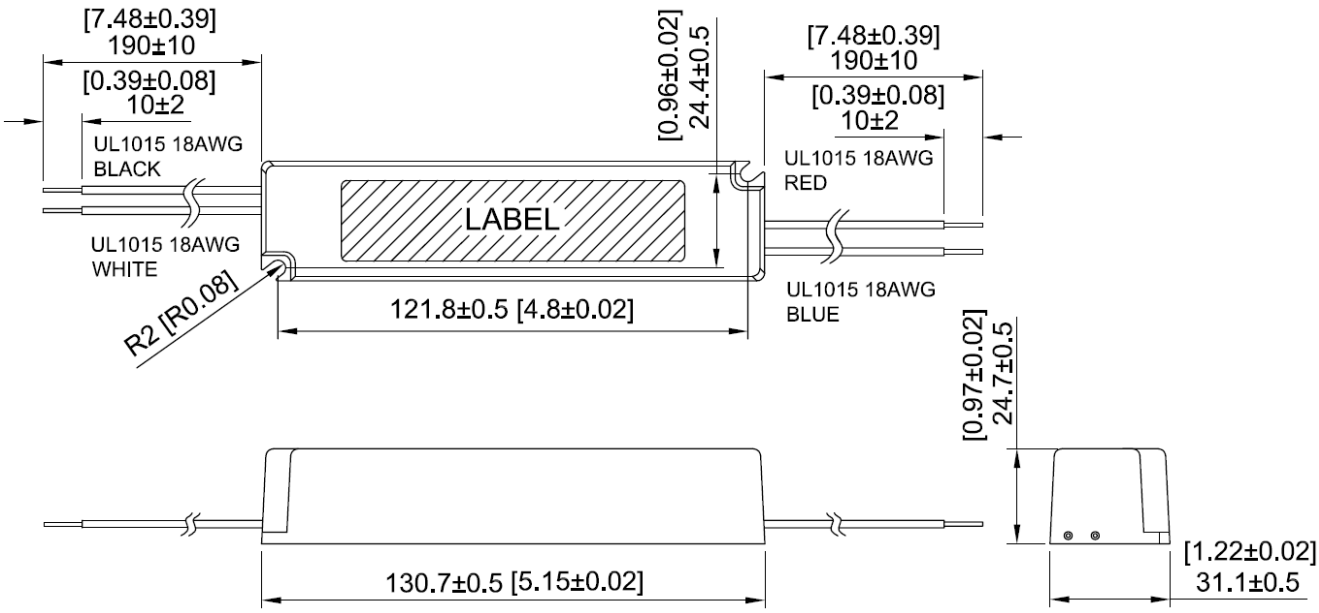

Unit : mm【inch】

※Reference