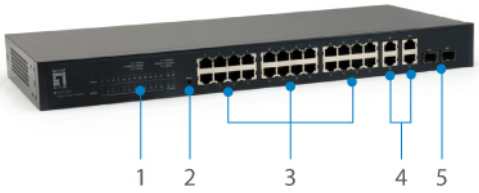

FGS-2800 ▯▯▯▯ ▯▯: 1

28-Port Web Smart Fast Ethernet Switch, 2 x Gigabit SFP/RJ45 Combo, 2 x Gigabit RJ45

LevelOne FGS-2800 is Fast Ethernet switch with 24 10/100Mbps ports and 4 10/100/1000Mbps Ports shared 2 SFP(mini GBIC) ports, providing you a cost-effective, space-saving solution for expanding your network. making you be able to transfer high bandwidth-needed files larger and faster in an easy way. And the two gigabit SFP ports allow you to add fiber-optic connectivities for connecting to other network switches to obtain long-distance communication.

This FGS-2800 device provides the easy management function, the network administrator can configure the status and the port function setting of the device through the Web-Based UI. When installing the auto-discovery management tool helps network managers to search and access those switches on LAN easily. Therefore, network managers can access switches that support autodiscovery on LAN without memorizing IP address.

1
2
3
4
5
6

1. LED Indicators
2. Reset Button
3.10/100Mpbs Ports
4. 10/100/1000Mpbs Ports
5. SFP Slot
6. Internal Power Socket

Key Features

- 10/100/1000Mbps의 유선 속도 전송 및 수신
- IEEE 802.1d/w/s 신장 트리 프로토콜(STP) 및 포트 미러링
- IP Multicast Filtering through IGMP Snooping V1 / V2 / V3
- IEEE 802.1p QoS with 4 priority queues
- Supports port-based VLAN, IEEE 802.1Q VLAN Tagging
- 16K MAC 주소 자동 학습 및 자동 에이징 지원
- 데이터 전송 ▯▯▯ 증가시키는 10K ▯▯ 프레임
- 19 인치 메탈 하우징
-

www.level1.com
Page 1 of 4

System Specifications

Standards & Protocols:
IEEE 802.3 10-BASE-T, Ethernet
IEEE 802.3u 100-BASE-TX, Fast Ethernet
IEEE 802.3ab 1000BASE-T, Gigabit Ethernet
IEEE 802.3z 1000Base-X Gigabit Ethernet
IEEE 802.1p Quality of Service (QoS)
IEEE 802.1Q Virtual LANs (VLANs)
IEEE 802.1d Standard Spanning Tree Protocol (STP)
IEEE 802.1w Rapid Spanning Tree Protocol (RSTP)
IEEE 802.1s Multiple Spanning Tree Protocol (MSTP)
IEEE 802.3x Flow Control (full-duplex flow control)

Memory:
8MB Flash
32MB DDR

Buffer Memory:
2560KB

Connectors and Cabling:
24 x 10/100BASE-TX RJ-45 ports
4 x 10/100/1000BASE-T RJ-45 ports with 2 shared 100/1000Base-X SFP Slot

Button/Knob:
Reset Button

Indicator:
Power, System, 10/100Mbps, 10/100/1000Mbps

Transmission Method:
Store-and-Forward

Power Input:
100-240V AC, 50-60 Hz, Internal Power Supply

Power Consumption:
12.48W

Features

General:
Quality of Service (QoS):
Traffic classification based on IEEE 802.1p CoS, DSCP, Supports WRR,
Rate Limiting - Ingress resolution; Egress resolution

Spanning Tree:
IEEE 802.1d Spanning Tree Protocol (STP)
IEEE 802.1w Rapid Spanning Tree Protocol (RSTP)
IEEE 802.1s Multiple Spanning Tree Protocol (MSTP)
Loop/Root Guard, TC-BPDU Guard, BPDU Guard/Filter

Virtual Local Area Network (VLAN):
802.1Q tag-based VLAN - up to 4096 VLAN IDs

Security:
Storm Control:
Prevents traffic on a LAN from being disrupted by a broadcast, multicast, or unicast storm on a port

Access Control:
HTTPS; Manage VLAN assignment

Port security: access control port-based
Filtering: Port-/MAC-/IP-based security

Management:
Diagnosis:
syslog

Network:
RMON (groups 1, 2, 3 and 9) Management; SNMP v1, v2c, v3; HTTPs

Ease of Use:
Firmware and Configuration: upgrade/downgrade via HTTP

Performance

Backplane (Gbps):
12.8Gbps

MAC Address Table:
16K

Data Transfer Rate:
10/100/1000Mbps

Packet Forwarding Rate:
1000Mbps port - 1,488,000pps
100Mbps port - 148,000pps
10Mbps port - 14,880pps

Jumbo Frame (K):
10KB

Environment

Temperature (°C):
Operating: 0°C ~ 40°C
Storage: -40°C ~ 70°C

Humidity (Non-condensing):
Storage: 5% ~ 90%
Operating: 10 ~ 90%

Deployment:
19-inch rack-mountable

Physical Specifications

Dimensions (W x D x H mm):
440 x 180 x 44 mm

Weight (g):
2288 g

Approval and Compliance

EMI/EMS:
FCC Part 15 Class A, CE, RoHS

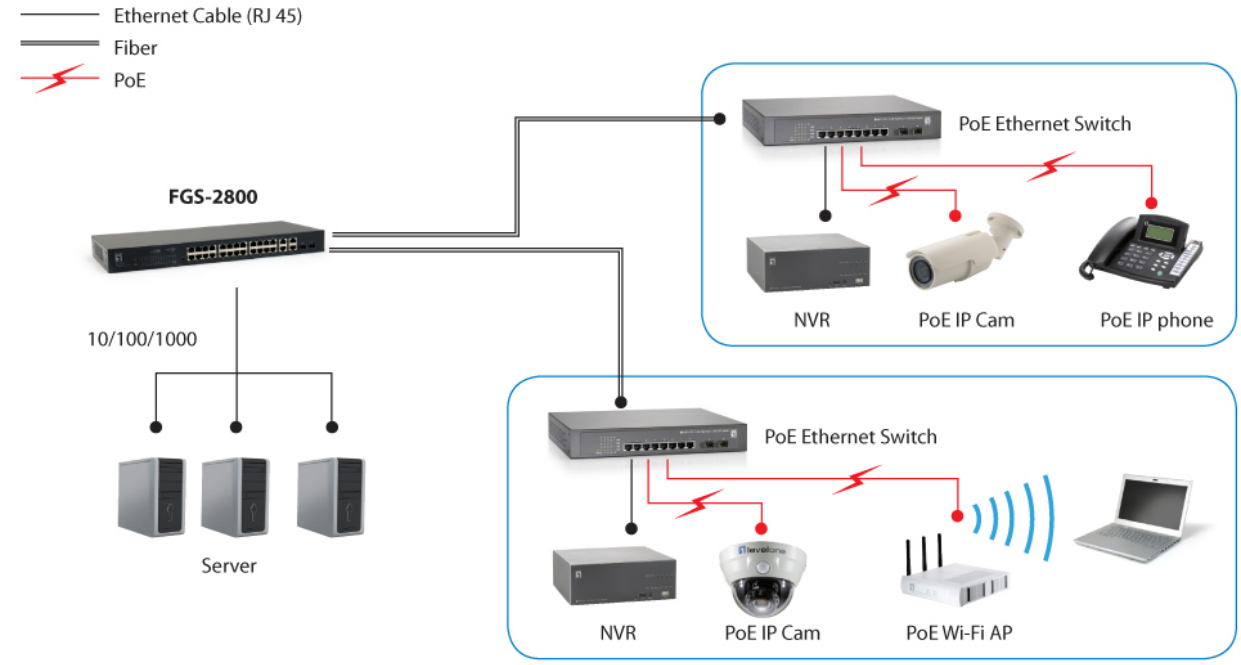

Order Information

FGS-2800

Package Contents

FGS-2800
Power Cord
19" Rackmount Kit
Rubber Feet
Quick Installation Guide
Resource CD (User Manual)

No liability or responsibility for any errors or omissions in the content.
Specifications are subject to change without notice.
All mentioned brand names are registered trademarks and property of their owners.
Copyright © Digital Data Communications GmbH, Germany. All Rights Reserved.