APPROVED: _____

DATE: _____ TITLE: _____

Rev	AWO #	Description	Date	Appr
-		RELEASED	3/19/08	
A		REDRAWN	10/26/11	
B		REVISED SPEC.	12/20/11	

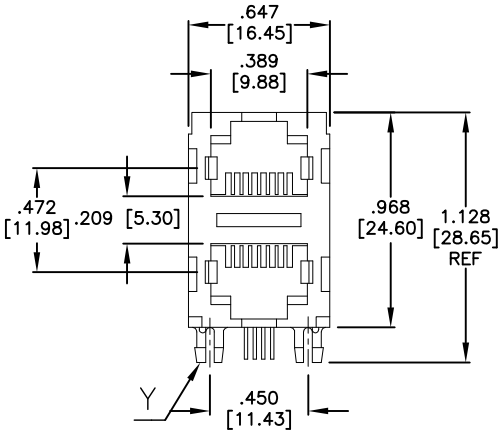

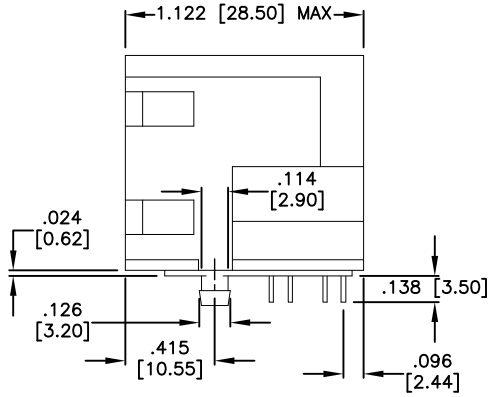

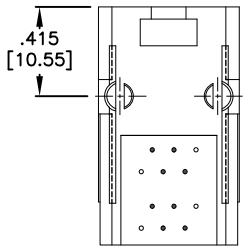

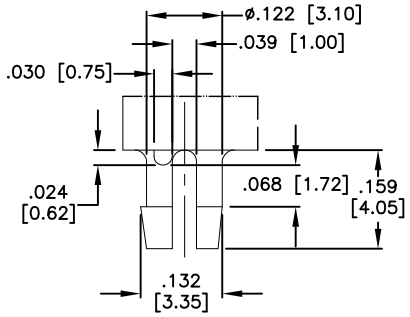

DETAIL Y

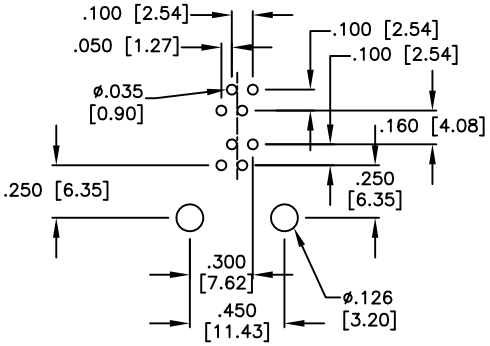

RECOMMENDED PCB LAYOUT

SPECIFICATIONS:
Material:
Insulator: PBT, glass fiber, rated UL 94V-0
Insulator color: Black
Contacts: Phosphor Bronze
Plating:
Gold over Nickel underplate on contact area,
Tin over Copper underplate on PCB tails.
Electrical:
Operating voltage: 150 VAC max
Current rating: 1.5 Amps max
Contact resistance: 20 mohms max
Insulation resistance: 500 Mohms min @ 500 VDC
Dielectric withstanding voltage: 1000 VAC for 1 minute
Temperature Rating:
Operating temperature: -40°C to +125°C
Environmental:
Lead free, RoHS compliant. RoHS COMPLIANT

UNLESS OTHERWISE SPECIFIED
ALL DIMENSIONS ARE INCHES [MM]
TOLERANCES: EXCEPT AS NOTED

INCHES		HOLES	
.X	± .10	Ø.X	±.10
.XX	± .020	Ø.XX	±.015
.XXX	± .015	Ø.XXX	±.010

APPROVALS		DATE
DRAWN	SS	3/19/08
CHECKED		
APPROVED		

ADAM TECH
909 Rahway Avenue, Union, NJ 07083
Phone: 908-687-5000 Fax: 908-687-5710

TITLE: 2 PORT GANGED STACKED JACK 6P4C

SIZE	PART NO.	REV.
X	MTJG-2-64JX1	B

REF: S00065T | SCALE: NTS | SHEET 1 OF 1