U.S. Patent No. 8,091,222 B2

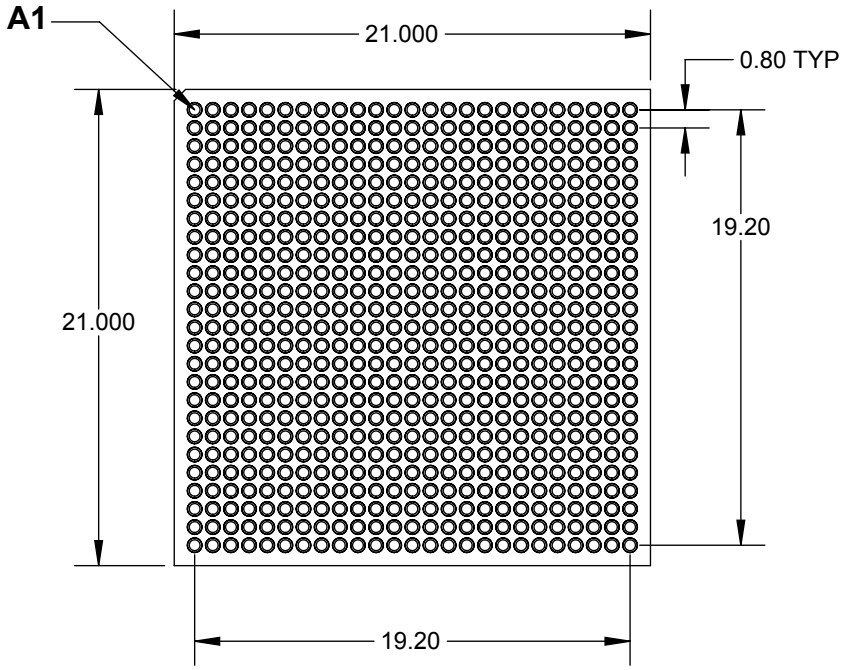

TOP VIEW

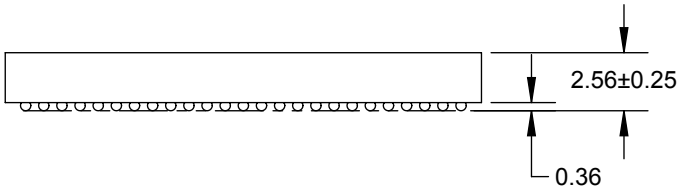

SIDE VIEW

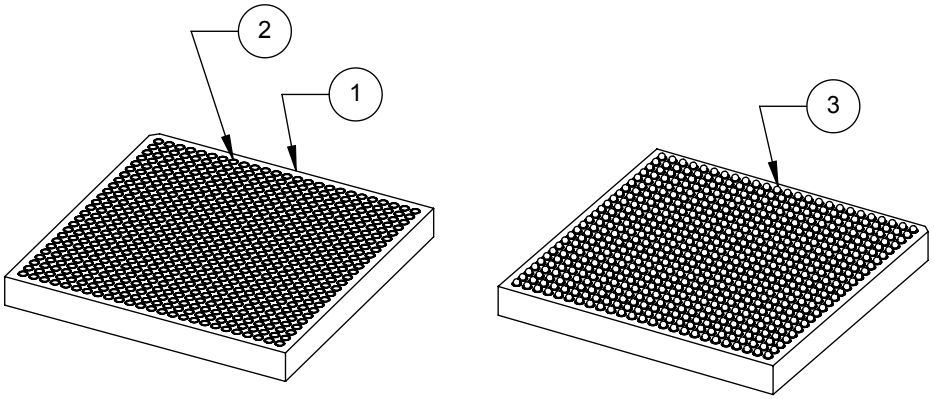

ITEM NO.	DESCRIPTION
1	High Temp Substrate
2	High Density Giga-Snap Receptacle
3	Solder Ball, 0.4572mm dia (See Table)

PART NO. SUFFIX	SOLDER BALL ALLOY
-64	Sn63Pb37
-64F*	Sn96.5Ag3.0Cu0.5
*RoHS Compliant	

Description: Giga-snaP BGA SMT Foot

Primary dimension units are millimeters, Secondary dimension units are [inches].

Tolerances: Hole diameters ±0.03mm [±0.001"], Pitches (from true position) ±0.025mm [±0.001"], substrate thickness tolerance ±10%, all other tolerances ±0.13mm [±0.005"] unless stated otherwise. Materials and specifications are subject to change without notice.

SF-BGA625C-B-64 Drawing				
SF-BGA625C-B-64F Drawing	Material: N/A Finish: N/A Weight: N/A	STATUS: Released	SHEET: 1 OF 2	REV. B
Ironwood Electronics, Inc. Tele: (800) 404-0204 www.ironwoodelectronics.com		DRAWN BY: M. Raske	SCALE: 3:1	
		FILE: SF-BGA625C-B-64 Dwg	DATE: 04/12/2012	

Rev	Date	Initials	Description
A	-	-	Original
B	7/7/15	MT/OA	updated materials to generic definitions

Description: Revision History

Primary dimension units are millimeters, Secondary dimension units are [inches].

Tolerances: Hole diameters ±0.03mm [±0.001"], Pitches (from true position) ±0.025mm [±0.001"], substrate thickness tolerance ±10%, all other tolerances ±0.13mm [±0.005"] unless stated otherwise. Materials and specifications are subject to change without notice.

Specification	Material:	STATUS: Released	SHEET: 2 OF 2	REV. B
Ironwood Electronics, Inc. Tele: (800) 404-0204 www.ironwoodelectronics.com	Finish: Weight:	DRAWN BY: M. Raske	SCALE: 1:1	
		FILE: SF-BGA625C-B-64 Dwg	DATE: 04/12/2012	