JFW MODEL
115-007

IMPEDANCE
50 Ohms nominal

FREQUENCY RANGE
DC-8 GHz

VSWR (typical)

1 GHz	1.029:1
2 GHz	1.042:1
3 GHz	1.047:1
4 GHz	1.064:1
5 GHz	1.088:1
6 GHz	1.092:1
7 GHz	1.075:1
8 GHz	1.096:1

Connector Body
Gold Plated

Connector Pins
Gold Plated

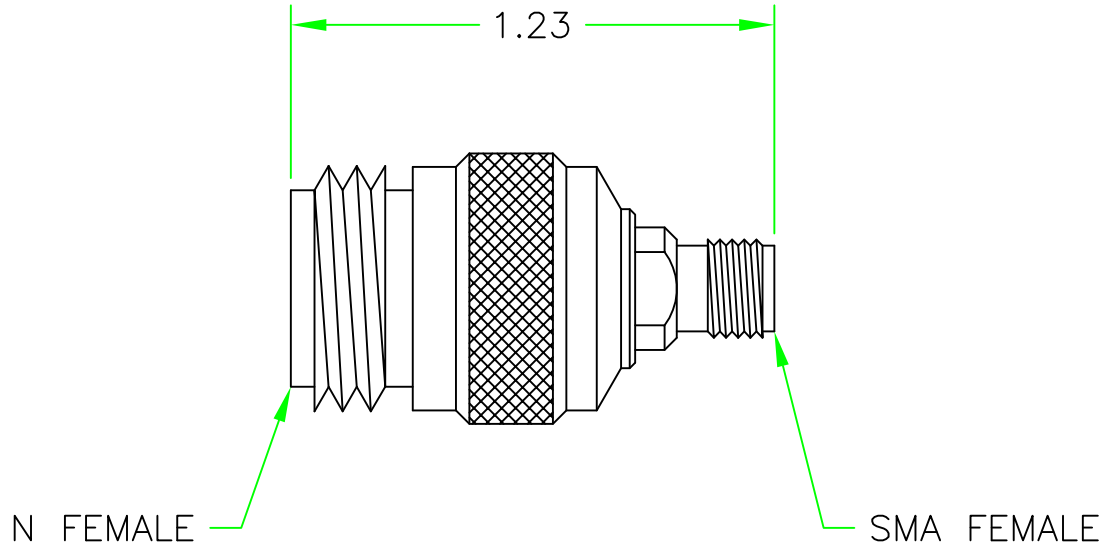

REV	ECN	DATE	BY	APPR
–	ISSUED	4–12–18	DTS	TRS
A	28718	5–7–18	DTS	TRS

JFW INDUSTRIES, INC.
www.jfwindustries.com PH: 317–887–1340

MATERIAL

FINISH

MODEL 115–007

SCALE 2X

DESCRIPTION RF ADAPTER SMA FEMALE/N FEMALE

PROPRIETARY INFORMATION

ALL SURFACES ARE TO BE FREE OF BURRS, PITS, & SCRATCHES

TOLERANCES
.XX±.010 .XXX±.005 XX°±.5°

DWG # 115–007