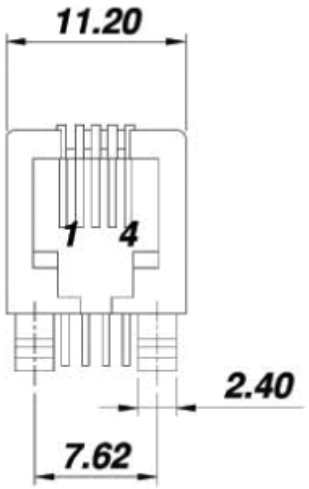

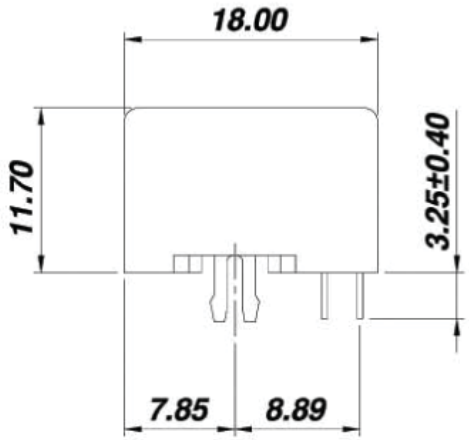

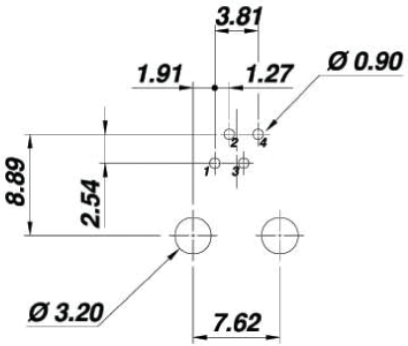

PCB LAYOUT
(Top View)

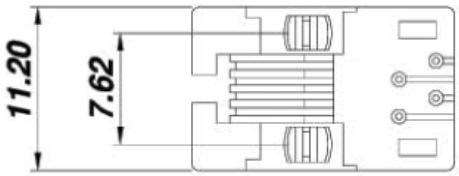

Materials:

- Insulator: P.B.T. Glass Filled, UL94V-0
  - Soldering Temperature: 235°C
- Spring Wire: 0.45MM Dia. Phosphor Bronze
  Gold Plating over Nickel
- Color: Black

Electrical:

- Insulation Resistance: 500MΩ Min.
- Contact Resistance: 20MΩ Max.
- Rating Current: 1.5A Max.
- Rating Voltage: 120V AC
- Dielectric Withstanding: 1,000V AC at 1 Minute
- Operating Temperature: -40°C ~ +85°C
- Durability: 500 Mating cycles Min.

RoHS Complaint

Scale	1:1						Name	Item No. A-2004-3-4-LP-N-R
TOLERANCE						Drawn	12.20.11	Chappell
X.X	±0.40					Approved		Title: Modular Jack, Low Profile, 4P4C, 90°, Side Entry, 6μ", Black, PBT Glass Filled
X.XX	±0.25							
X.XXX	±0.15							Drawing No. rev00
Angle	±3°							
			Modification	Date	Name			Replace / Sheet

ASSMANN WSW components