Customer Information Sheet

DRAWING No.: M20-003	SHEET 2 OF 2	IF IN DOUBT - ASK	©	NOT TO SCALE	THIRD ANGLE PROJECTION	ALL DIMENSIONS IN mm

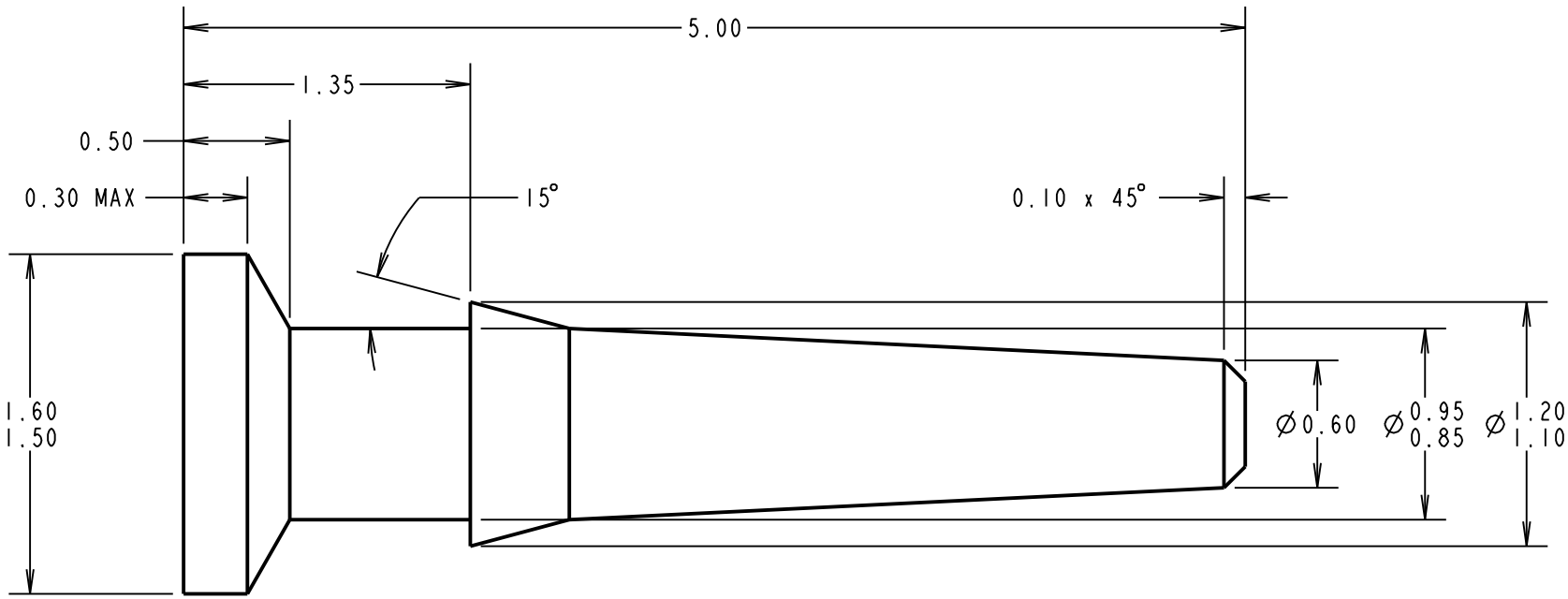

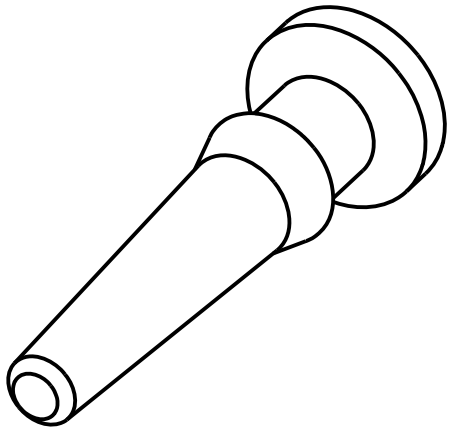

NOTES:
1. PACKED IN QUANTITIES OF 100 PER BAG, LOOSE.

SF	9	11.04.13	11993
NAME	ISS.	DATE	C/NOTE

APPROVED:	S.FLOWER
CHECKED:	M.PLESTED
DRAWN:	K. SHIER
CUSTOMER REF.:	
ASSEMBLY DRG:	

HARWIN

www.harwin.com
technical@harwin.com

THIS DRAWING AND ANY INFORMATION OR DESCRIPTIVE MATTER SET OUT HEREON ARE CONFIDENTIAL AND COPYRIGHT PROPERTY OF THE HARWIN GROUP AND MUST NOT BE DISCLOSED, LOANED, COPIED OR USED FOR MANUFACTURING, TENDERING OR FOR ANY OTHER PURPOSE WITHOUT THEIR WRITTEN PERMISSION.

TOLERANCES
X. = ±1mm
X.X = ±0.25mm
X.XX = ±0.10mm
X.XXX = ±0.01mm
ANGLES = ±5°
UNLESS STATED

MATERIAL:
BRASS CW614N TO BS EN 12164 (CuZn39Pb3)

FINISH: 2μ NICKEL

S/AREA: mm²

TITLE:
LOOSE
POLARISING PIN

DRAWING NUMBER:
M20-003

SHT 2 OF 2