SHINDENGEN

Schottky Rectifiers (SBD)

Modules

D240SC4M

40V 240A

FEATURES

- High capacity modules
- Low VF
- Small θ jc

APPLICATION

- Big switching power supply
- DC/DC converter
- Mainframe
- IC tester

OUTLINE DIMENSIONS

Case : Modules

Unit : mm

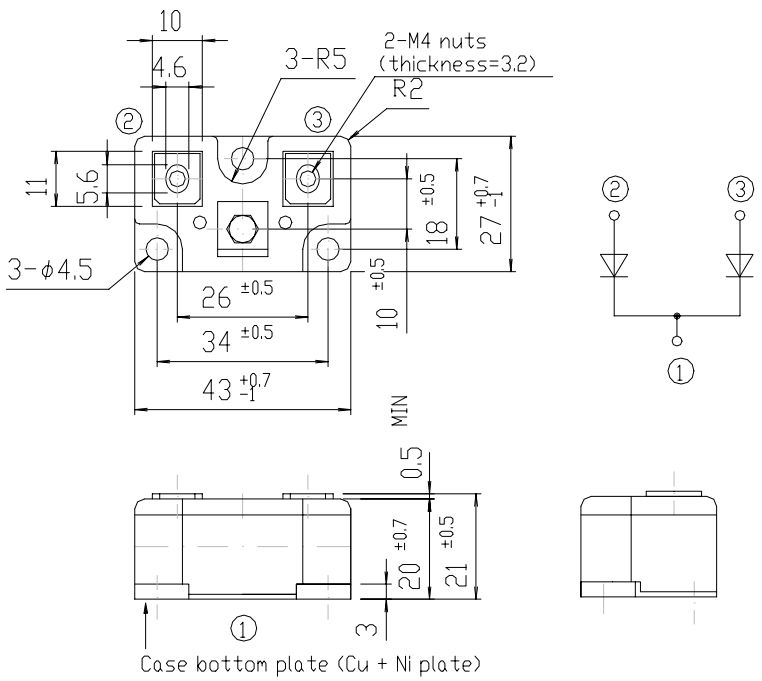

RATINGS

●Absolute Maximum Ratings (If not specified Tc=25℃)

Item	Symbol	Conditions	Ratings	Units
Storage Temperature	Tstg		-40～125	℃
Operating Junction Temperature	Tj		125	℃
Maximum Reverse Voltage	V_{RM}		40	V
Repetitive Peak Surge Reverse Voltage	V_{RRSM}	Pulse width 100ns, duty 1/100	48	V
Average Rectified Forward Current	I_O	50Hz sine wave, R-load, Rating for each arm Io/2, Tc=77℃	240	A
Peak Surge Forward Current	I_{FSM}	50Hz sine wave, Non-repetitive 1cycle peak value, Rating of per arm Tj=125 ℃	1600	A
Mounting Torque	TOR		1.7	N·m

●Electrical Characteristics (If not specified Tc=25℃)

Item	Symbol	Conditions	Ratings	Units
Forward Voltage	V_F	I_F=120A, Pulse measurement, Rating of per arm	Max.0.60	V
Reverse Current	I_R	V_R=V_{RM}, Pulse measurement, Rating of per arm	Max.80	mA
Junction Capacitance	Cj	f=1MHz, V_R=10V, Rating of per arm	TYP 4.2	nF
Thermal Resistance	θ jc	junction to case	Max.0.23	℃/W
	θ cf	case to heatsink, Mounting torque = 1.7N·m	Max.0.12	

Copyright & Copy;2002 Shindengen Electric Mfg.Co.,Ltd.